ABBREVIATIONS:

ABV	ABOVE
AFF	ABOVE FINISHED FLOOR
BLW	BELOW
BOT	BOTTOM
BOW	BOTTOM OF WALL
CAB	CABINET
CL	CENTERLINE
CONC	CONCRETE
CONT	CONTINUOUS
CP	CENTERPOINT
DET	DETAIL
DIA	DIAMETER
DIM	DIMENSION
DR	DOOR
DS	DOWNSPOUT
D/W	DISHWASHER
EA	EACH
EX	EXISTING
EXT	EXTERIOR
FOC	FACE OF CONCRETE
FOW	FACE OF WALL
FN GRDE	FINISHED GRADE
FNDN	FOUNDATION
FLR	FLOOR
FP	FIREPLACE
GA	GAUGE
GWB	GYPSUM WALL BOARD
HB	HOSE BIBB
HGT	HEIGHT
INFO	INFORMATION
INSUL	INSULATION
INT	INTERIOR
LV	LOW VOLTAGE
MTL	METAL
MFR	MANUFACTURER
N/A	NOT APPLICABLE
NIC	NOT IN CONTRACT
NFC	NOT FOR CONSTRUCTION
OC	ON CENTER
PL	PROPERTY LINE
RAD	RADIUS
RE:	REFER TO
SIM	SIMILAR
TBD	TO BE DETERMINED
TG	TEMPERED GLASS
T&G	TONGUE & GROOVE
TOW	TOP OF WALL
TYP	TYPICAL
UNO	UNLESS NOTED OTHERWISE
VIF	VERIFY IN FIELD
WD	WOOD
WDW	WINDOW

PLAN LEGEND:

- EXISTING WALL TO REMAIN
- NEW FULL-HEIGHT WALL
- NEW FULL-HEIGHT CONCRETE WALL
- PARTIAL-HEIGHT WALL
- PROPERTY LINE
- BUILDING / STRUCTURE ABOVE
- BUILDING / STRUCTURE BELOW
- CENTERLINE
- AREA OF DRAWING REVISION
- ELEVATION MARKER
- SECTION MARKER

GENERAL NOTES:

1. DO NOT SCALE DRAWINGS.
2. THIS PROJECT SHALL COMPLY WITH ALL GOVERNING REGULATIONS, ORDINANCES, BUILDING CODES, OR COVENANTS OF THE AREA IN WHICH IT IS BUILT.
3. APPROVAL BY AN INSPECTOR DOES NOT CONSTITUTE AUTHORITY TO DEVIATE FROM THE DRAWINGS OR SPECIFICATIONS.
4. THE CONTRACTOR SHALL SCHEDULE WALK-THROUGHS AT EACH OF BELOW NOTED INTERVALS:
   - A. PRIOR TO THE COMMENCEMENT OF CONSTRUCTION.
   - B. PRIOR TO THE COMMENCEMENT OF ALL MECHANICAL + ELECTRICAL WORK.
5. PROVIDE ALL NECESSARY BARRICADES, WARNING SIGNS, + DEVICES TO PROTECT PUBLIC + CONSTRUCTION PERSONNEL DURING CONSTRUCTION.
6. MAINTAIN ALL REQUIRED ACCESS + EGRESS DURING CONSTRUCTION.

DUTY OF COOPERATION:

RELEASE + ACCEPTANCE OF THESE DOCUMENTS INDICATES COOPERATION AMONG THE OWNER, THE CONTRACTOR, + RIPPLE DESIGN STUDIO. ANY ERRORS, OMISSIONS, OR DISCREPANCIES DISCOVERED BY THE USE OF THESE DOCUMENTS SHALL BE REPORTED IMMEDIATELY TO RIPPLE DESIGN STUDIO. FAILURE TO DO SO SHALL RELIEVE RIPPLE DESIGN STUDIO FROM ANY RESPONSIBILITY OF THE CONSEQUENCES.

ANY DEVIATIONS FROM THESE DOCUMENTS WITHOUT THE CONSENT OF RIPPLE DESIGN STUDIO ARE UNAUTHORIZED. FAILURE TO OBSERVE THESE PROCEDURES SHALL RELIEVE RIPPLE DESIGN STUDIO OF RESPONSIBILITY FOR ALL CONSEQUENCES ARISING OUT OF SUCH ACTIONS.

SITE NOTES:

1. ALL IMMEDIATE AREAS AFFECTED BY NEW DEVELOPMENT SHALL BE GRADED AWAY FROM FOUNDATIONS + ADJACENT PROPERTIES @ 10% AS POSSIBLE, 2% MIN.

AVERAGE BUILDING ELEVATION CALCS:

ELEVATION POINT "A"	75.30
SEGMENT LENGTH "A"	30.50
ELEV "A" x SEGMENT "A"	**2,296.65**
ELEVATION POINT "B"	73.00
SEGMENT LENGTH "B"	15.71
ELEV "B" x SEGMENT "B"	**1,146.83**
ELEVATION POINT "C"	74.00
SEGMENT LENGTH "C"	31.33
ELEV "C" x SEGMENT "C"	**2,318.42**
ELEVATION POINT "D"	75.45
SEGMENT LENGTH "D"	3.00
ELEV "D" x SEGMENT "D"	**226.35**
ELEVATION POINT "E"	73.60
SEGMENT LENGTH "E"	34.25
ELEV "E" x SEGMENT "E"	**2,520.80**
ELEVATION POINT "F"	64.10
SEGMENT LENGTH "F"	24.70
ELEV "F" x SEGMENT "F"	**1,583.27**
ELEVATION POINT "G"	65.20
SEGMENT LENGTH "G"	24.00
ELEV "G" x SEGMENT "G"	**1,564.80**
ELEVATION POINT "H"	65.50
SEGMENT LENGTH "H"	7.75
ELEV "H" x SEGMENT "H"	**507.63**
ELEVATION POINT "I"	66.00
SEGMENT LENGTH "I"	20.00
ELEV "I" x SEGMENT "I"	**1,320.00**
ELEVATION POINT "J"	66.70
SEGMENT LENGTH "J"	7.75
ELEV "J" x SEGMENT "J"	**516.93**
ELEVATION POINT "K"	66.60
SEGMENT LENGTH "K"	14.50
ELEV "K" x SEGMENT "K"	**965.70**
ELEVATION POINT "L"	66.30
SEGMENT LENGTH "L"	50.00
ELEV "L" x SEGMENT "L"	**3,315.00**
ELEVATION POINT "M"	64.50
SEGMENT LENGTH "M"	17.00
ELEV "M" x SEGMENT "M"	**1,096.50**
ELEVATION POINT "N"	66.00
SEGMENT LENGTH "N"	30.50
ELEV "N" x SEGMENT "N"	**2,013.00**
ELEVATION POINT "O"	66.90
SEGMENT LENGTH "O"	2.50
ELEV "O" x SEGMENT "O"	**167.25**
ELEVATION POINT "P"	70.00
SEGMENT LENGTH "P"	21.50
ELEV "P" x SEGMENT "P"	**1,505.00**
TOTAL OF ELEVATION POINTS x SEGMENT LENGHTS	**23,064.12**
TOTAL SEGMENT LENGTHS	**334.99**
AVERAGE GRADE	68.85

LOT COVERAGE CALCS:

LOT AREA:	16,678 FT²
LOT SLOPE:	31.64%
MAXIMUM ALLOWABLE LOT COVERAGE:	(30%) 5,003.4 FT²
EXISTING RESIDENCE ROOF:	2,773 FT²
EXISTING VEHICULAR USE:	610 FT²
TOTAL EXISTING LOT COVERAGE:	**3,383 FT²**
EXISTING VEHICULAR TO BE REMOVED:	[148 FT²]
PROPOSED ADDITIONAL ROOF AREA:	723 FT²
PROPOSED COVERED PATIO + DECK AREA:	425 FT²
TOTAL PROPOSED LOT COVERAGE:	**1,148 FT²**
TOTAL LOT COVERAGE UPON COMPLETION:	(26.27%) 4,383 FT²

HARDSCAPE CALCULATIONS:

LOT AREA:	16,678 FT²
MAXIMUM ALLOWABLE HARDSCAPE COVERAGE:	(12.72%) 2,121.42 FT²
(9% OF LOT 1,501 + BORROWED AREA 620.4)	
EXISTING UNCOVERED DECK:	654 FT²
EXISTING UNCOVERED PATIO:	125 FT²
EXISTING WALKWAYS:	343 FT²
EXISTING STAIRS:	442 FT²
EXISTING ROCKERIES + RETAINING WALLS:	636 FT²
TOTAL EXISTING IMPERVIOUS SURFACE:	**2,200 FT²**
TOTAL HARDSCAPE TO BE REMOVED:	[909 FT²]
PROPOSED UNCOVERED DECK AREA:	291 FT²
PROPOSED WALKWAY AREA:	161 FT²
TOTAL PROPOSED HARDSCAPE AREA:	**452 FT²**
TOTAL HARDSCAPE AREA UPON COMPLETION:	(10.45%) 1,743 FT²
TOTAL NET HARD SURFACE (IMPERVIOUS) CHANGE:	**+543 FT²**

REPLACEMENT TREE SCHEDULE:

PLANTING TYPE	COMMON NAME	SCIENTIFIC NAME	SIZE	SPACING	QUANTITY	PLANTING NOTES
TYPE 1	VINE MAPLE	ACER CIRCINATUM	6' TALL MIN.	9'-0"	2	PART SHADE - SHADE, DRY - MOIST

TOTAL REPLACEMENT TREES 2

SITE PLAN

SCALE: 1" = 10'

1. A NFPA 13D FIRE SPRINKLER SYSTEM IN COMPLIANCE WITH NFPA 13D AND CoMI STANDARDS SHALL BE INSTALLED THROUGHOUT THE RESIDENCE. A SEPARATE FIRE PERMIT IS REQUIRED."

NOTE THAT THIS SPRINKLER SYSTEM REQUIRES A MINIMUM OF 1" WATER METER AND SUPPLY LINE.

FLOOR AREAS:

LOT AREA:	16,678 FT²
MAXIMUM ALLOWABLE GFA (R-15, 12,000 or 40%):	(40%) 6,671.20 FT²
EX BASEMENT FLOOR AREA:	1,193 FT²
EX BASEMENT 'GARAGE' AREA:	495 FT²
NEW BASEMENT FLOOR AREA:	751 FT²
NEW BASEMENT 'EXTERIOR' STORAGE AREA:	[163 FT²]
TOTAL BASEMENT FLOOR AREA UPON COMPLETION:	2,603 FT²
EX FIRST FLOOR AREA:	1,881 FT²
NEW FIRST FLOOR AREA:	494 FT²
NEW FIRST FLOOR COVERED DECK:	248 FT²
TOTAL FIRST FLOOR AREA UPON COMPLETION:	2,623 FT²
TOTAL FLOOR AREA UPON COMPLETION:	**5,226 FT²**
EXISTING GARAGE FLOOR AREA:	384 FT²
PROPOSED GARAGE FLOOR AREA:	270 FT²
TOTAL GARAGE AREA UPON COMPLETION:	**654 FT²**
TOTAL GROSS FLOOR AREA UPON COMPLETION:	(35.2%) 5,879 FT²

MINIMUM SIDE YARD WIDTH:

LOT AREA	17,123 FT²
EFFECTIVE LOT WIDTH	125'-7"
REQUIRED COMBINED SIDE YARD:	(17%) 21.35'
MINIMUM SIDE YARD BASED ON LOT WIDTH:	(33% OF 21.35') 7.04'

TREE CALCULATIONS:

EXISTING TREES:		DBH:	CONDITION:	RETAINED?	MICC 19.16 LIST? (REGULATED)	EXCEPTIONAL?	REPLACEMENT TREES
TREE #63:	CARPINUS BETELUS	6.0 IN	GOOD	YES	NO	NO	0
TREE #64:	PRUNUS LUSITANICA	11.0 IN	GOOD	YES	YES	NO	0
TREE #65:	PRUNUS LUSITANICA	8.0 IN	GOOD	YES	NO	NO	0
TREE #66:	PRUNUS LUSITANICA	8.0 IN	FAIR	YES	NO	NO	0
TREE #67:	THUJA PLICATA	22.0 IN	FAIR	YES	YES	NO	0
TREE #68:	SALIX SITCHENSIS	6.0 IN	POOR	YES	NO	NO	0
TREE #69:	THUJA PLICATA	22.0 IN	FAIR	YES	YES	NO	0
TREE #70:	THUJA PLICATA	19.0 IN	FAIR	YES	YES	NO	0
TREE #71:	THUJA PLICATA	20.0 IN	FAIR	YES	YES	NO	0
TREE #72:	THUJA PLICATA	20.0 IN	GOOD	YES	YES	NO	0
TREE #73:	PSEUDOTSUGA MENZIESII	18.0 IN	GOOD	YES	YES	NO	0
TREE #74:	PSEUDOTSUGA MENZIESII	17.0 IN	FAIR	YES	YES	NO	0
TREE #75:	PICEA SITCHENSIS	12.0 IN	FAIR	YES	YES	YES	0
TREE #76:	PSEUDOTSUGA MENZIESII	42.0 IN	GOOD	YES	YES	YES	0
TREE #77:	THUJA PLICATA	44.0 IN	FAIR	YES	YES	YES	0
TREE #78:	CORNUS NUTTALLII	12.0 IN	FAIR	YES	YES	YES	0
TREE #79:	CORNUS NUTTALLII	7.0 IN	FAIR	YES	YES	YES	0
TREE #80:	CORNUS NUTTALLII	7.0 IN	POOR	YES	YES	YES	0
TREE #81:	ARBUTUS ANDRACHNE	15.0 IN	FAIR	YES	YES	NO	0
TREE #82:	ARBUTUS ANDRACHNE	10.0 IN	FAIR	YES	YES	NO	0
TREE #83:	PINUS MONTICOLA	19.0 IN	FAIR	YES	YES	NO	0
TREE #84:	ARBUTUS ANDRACHNE	13.0 IN	FAIR	YES	YES	NO	0
TREE #85:	ARBUTUS ANDRACHNE	16.0 IN	FAIR	YES	YES	NO	0
TREE #86:	PRUNUS LUSITANICA	11.0 IN	GOOD	NO	YES	NO	2
TREE #87:	CORNUS NUTTALLII	11.0 IN	FAIR	YES	YES	YES	0
TOTAL REPLACEMENT TREES REQUIRED							2
	TOTAL EXISTING CALIPER:			396.0 IN			
	PROPOSED CALIPER OF TREES TO REMAIN:			**385.0 IN**			
				97.22%			

PROJECT INFO:

PROJECT ADDRESS:
5419 96TH AVE SE
MERCER ISLAND, WA 98040

SCOPE OF WORK:
ADDITION AND REMODEL PER PLAN

ZONE:
R-15

LEGAL DESCRIPTION:
LOT 11, CAY HILS, ACCORDING TO THE PLAT THEREOF RECORDED IN VOLUME 70 OF PLATS, PAGES 95 AND 96, IN KING COUNTY, WASHINGTON.
SITUATE IN THE COUNTY OF KING, STATE OF WASHINGTON.

ACCESSOR'S PARCEL NUMBER:
1438700110

BUILDING CODE + OCCUPANCY:
2021 IRC (ARCHITECTURAL) + IBC (STRUCTURAL)
R-3: SINGLE FAMILY RESIDENTIAL (RESIDENCE)
U: STORAGE (GARAGE, STORAGE)

TYPE OF CONSTRUCTION:
TYPE-V-N: NON-SPRINKLERED

PROJECT TEAM:

CLIENT / OWNER:
ALPAY RESIDENCE
5419 96TH AVE SE
MERCER ISLAND, WA 98040
206.913.2333

ARCHITECT / APPLICANT:
RIPPLE DESIGN STUDIO - JIM DEARTH
4303 STONE WAY N
SEATTLE, WA 98103
206.913.2333

SURVEYOR:
TERRANE
10801 MAIN STREET SUITE 102
BELLEVUE, WA 98004
425.458.4488

GEOTECHNICAL ENGINEER:
GEOTECH CONSULTANTS, INC. - MARC MCGINNIS
2401 10TH AVE E
SEATTLE, WA 98102
425.747.5618

STRUCTURAL ENGINEER:
BUKER ENGINEERING - DANIEL BUKER
4303 STONE WAY N
SEATTLE, WA 98103
206.258.6333

CONTRACTOR:
GT RESIDENTIAL CONTRACTING - GRAHAM TRAVIS
PO BOX 6241
EDMONDS, WA 98026
206.769.4128

VICINITY MAP:

SHEET INDEX:

A1.0	SITE PLAN
A1.1	SITE DIAGRAMS
	SURVEY
	SURVEY 2
D1.0	BASEMENT DEMOLITION PLAN
D1.1	FIRST FLOOR DEMOLITION PLAN
A2.0	BASEMENT FLOOR PLAN
A2.1	FIRST FLOOR PLAN
A2.2	ROOF PLAN
A3.1	SOUTH + NORTH BUILDING ELEVATIONS
A3.2	NORTH + WEST BUILDING ELEVATIONS
A3.3	BUILDING SECTIONS A-A + B-B
A4.1	DOOR + WINDOW SCHEDULES
A4.2	FINISH SCHEDULES
A4.3	PROJECT SPECIFICATION
A4.4	PROJECT SPECIFICATION
S1.0	GENERAL STRUCTURAL NOTES
S2.0	FOUNDATION PLAN
S2.1	MAIN FLOOR FRAMING PLAN
S2.2	ROOF FRAMING PLAN
S3.1	CONCRETE DETAILS
S3.2	CONCRETE DETAILS
S4.1	FLOOR FRAMING DETAILS
S4.2	FLOOR FRAMING DETAILS
S5.1	ROOF FRAMING DETAILS

RIPPLE
DESIGN STUDIO
206.913.2333
4303 STONE WAY N
SEATTLE, WA 98103

9790 REGISTERED ARCHITECT
JAMES M DEARTH
STATE OF WASHINGTON

ALPAY RESIDENCE
5419 96TH AVE SE MERCER ISLAND, WA 98040

SITE PLAN

THIS DRAWING, AS AN INSTRUMENT OF SERVICE IS + SHALL REMAIN THE SOLE PROPERTY OF RIPPLE DESIGN STUDIO + SHALL NOT BE REPRODUCED, PUBLISHED, OR USED IN ANY MANNER WITHOUT PROPER AUTHORIZATION.
COPYRIGHT © 2025 BY RIPPLE DESIGN STUDIO

RELEASE

PERMIT RESPONSE
9 DECEMBER 2025

CAR-2 PERMIT SUBMITTAL
23 DECEMBER 2025

PERMIT RESPONSE
7 JANUARY 2026

PERMIT RESPONSE
26 FEBRUARY 2026

A1.0

ALPAY
AUTHORED: 2/27/26

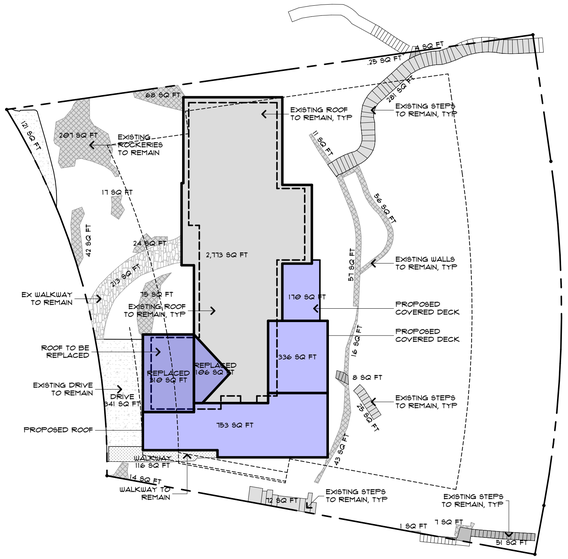

PROP IMPERVIOUS

SCALE: 1" = 20'

NOTE: NO HARDSCAPE OR DRIVEWAY WITHIN REQUIRED YARDS SHALL EXCEED 30 INCHES IN HEIGHT ABOVE EXISTING OR FINISHED GRADE WHICHEVER IS LOWER. HOWEVER DRIVEWAYS MAY EXCEED THE 30-INCH LIMIT WHEN DEMONSTRATED THAT PROPOSED HEIGHT IS THE MINIMUM FEASIBLE TO MEET MICC 19.09.040.

N

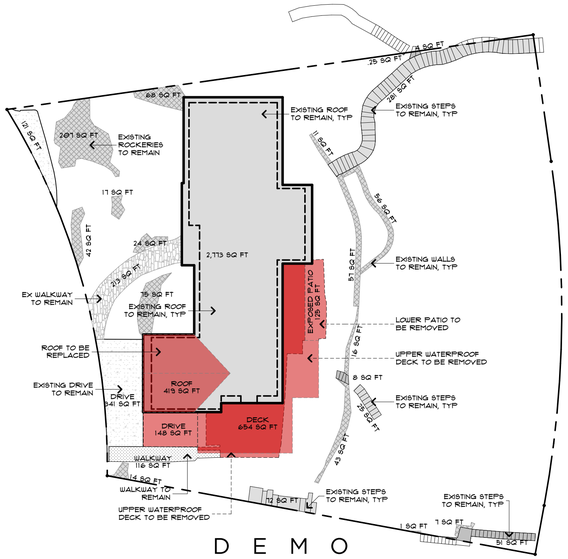

DEMO IMPERVIOUS

SCALE: 1" = 20'

N

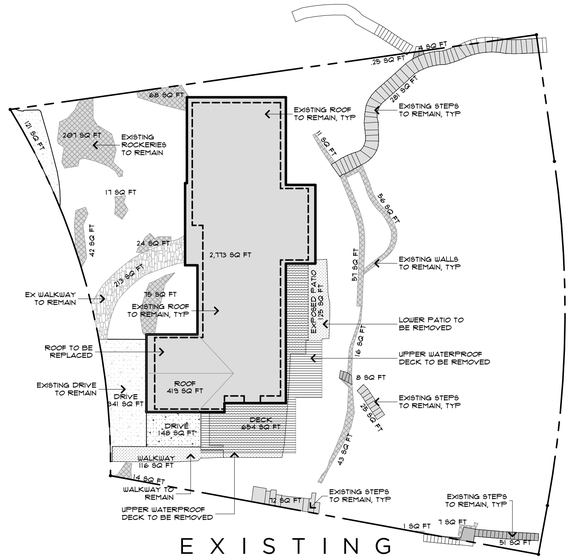

EXISTING IMPERVIOUS

SCALE: 1" = 20'

N

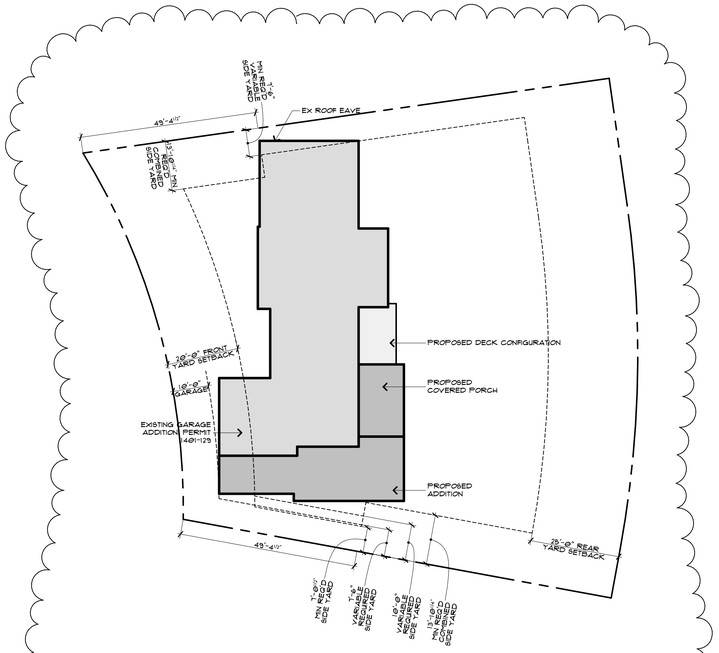

BUILDING PAD DIAGRAM

SCALE: 1" = 20'

IMPERVIOUS SURFACE CALCS:

EXISTING ROOF:	2,773 FT²
EXISTING DRIVE:	489 FT²
EXISTING PARKING @ NW CORNER:	121 FT²
EXISTING FRONT WALKWAY:	213 FT²
EXISTING SOUTH WALKWAY:	130 FT²
EXISTING IMPERVIOUS WOOD DECK:	654 FT²
EXISTING PATIOS (OUTSIDE FOOTPRINT OF DECK):	125 FT²
EXISTING SITE STEPS / STAIRS:	442 FT²
EXISTING ROCKERIES + RETAINING WALLS:	636 FT²
TOTAL EXISTING IMPERVIOUS SURFACE:	**5,583 FT²**
DRIVE TO BE REMOVED:	148 FT²
DECK TO BE REMOVED:	654 FT²
PATIO TO BE REMOVED:	125 FT²
WALKWAY TO BE REMOVED:	130 FT²
ROOF TO BE REMOVED / REPLACED:	416 FT²
TOTAL IMPERVIOUS TO BE REMOVED:	**1,473 FT²**
PROPOSED ROOF AREA:	753 FT²
PROPOSED COVERED DECK AREA:	336 FT²
PROPOSED UNCOVERED IMPERVIOUS DECK AREA:	170 FT²
PROPOSED WALKWAY AREA:	161 FT²
PROPOSED REPLACED ROOF (@ GARAGE):	416 FT²
TOTAL NEW PLUS REPLACED IMPERVIOUS AREA:	**1,836 FT²**
NET IMPERVIOUS INCREASE:	**252 FT²**

RIPPLE
DESIGN STUDIO
206.913.2333
4303 STONE WAY N
SEATTLE, WA 98103

9790 REGISTERED ARCHITECT
JAMES M DEARTH
STATE OF WASHINGTON

ALPAY RESIDENCE
5419 96TH AVE SE
MERCER ISLAND, WA
98040

SITE DIAGRAMS

THIS DRAWING, AS AN INSTRUMENT OF SERVICE, IS + SHALL REMAIN THE SOLE PROPERTY OF RIPPLE DESIGN STUDIO + SHALL NOT BE REPRODUCED, PUBLISHED, OR USED IN ANY MANNER WITHOUT PROPER AUTHORIZATION.
COPYRIGHT © 2025 BY RIPPLE DESIGN STUDIO

RELEASE

PERMIT RESPONSE
9 DECEMBER 2025

CAR-2 PERMIT SUBMITTAL
23 DECEMBER 2025

PERMIT RESPONSE
7 JANUARY 2026

PERMIT RESPONSE
26 FEBRUARY 2026

A1.1

ALPAY
PLOTTED: 2/27/26

TOPOGRAPHIC & BOUNDARY SURVEY

LEGAL DESCRIPTION

LOT 11, CAY HILLS, ACCORDING TO THE PLAT THEREOF RECORDED IN VOLUME 70 OF PLATS, PAGES 95 AND 96, IN KING COUNTY, WASHINGTON.

SITUATE IN THE COUNTY OF KING, STATE OF WASHINGTON.

BASIS OF BEARINGS

ACCEPTED THE BEARING OF N 51°40'27" W BETWEEN MONUMENTS FOUND AND SHOWN HEREON, CALCULATED PER REFERENCE NO. 1.

REFERENCES

R1. CAY HILLS, VOL. 70 OF PLATS, PGS. 95–96, RECORDS OF KING COUNTY, WASHINGTON.
R2. RECORD OF SURVEY, VOL. 163, PG. 156, RECORDS OF KING COUNTY, WASHINGTON.

VERTICAL DATUM

NAVD 88 PER GPS OBSERVATIONS

SITE TEMP. BENCHMARK
DESCRIPTION: PK NAIL W/ RED WASHER
LOCATION: 38.1'S & 8.6'E FROM THE NW PROPERTY CORNER
ELEVATION: 79.12'

SURVEYOR'S NOTES

1. THE TOPOGRAPHIC SURVEY SHOWN HEREON WAS PERFORMED IN JUNE OF 2025. THE FIELD DATA WAS COLLECTED AND RECORDED ON MAGNETIC MEDIA THROUGH AN ELECTRONIC THEODOLITE. THE DATA FILE IS ARCHIVED ON DISC OR CD. WRITTEN FIELD NOTES MAY NOT EXIST. CONTOURS ARE SHOWN FOR CONVENIENCE ONLY. DESIGN SHOULD RELY ON SPOT ELEVATIONS.
2. ALL MONUMENTS SHOWN HEREON WERE LOCATED DURING THE COURSE OF THIS SURVEY UNLESS OTHERWISE NOTED.
3. THE TYPES AND LOCATIONS OF ANY UTILITIES SHOWN ON THIS DRAWING ARE BASED ON INFORMATION PROVIDED TO US, BY OTHERS OR GENERAL INFORMATION READILY AVAILABLE IN THE PUBLIC DOMAIN INCLUDING, AS APPLICABLE, IDENTIFYING MARKINGS PLACED BY UTILITY LOCATE SERVICES AND OBSERVED BY TERRANE IN THE FIELD. AS SUCH, THE UTILITY INFORMATION SHOWN ON THESE DRAWINGS ARE FOR INFORMATIONAL PURPOSES ONLY AND SHOULD NOT BE RELIED ON FOR DESIGN OR CONSTRUCTION PURPOSES; TERRANE IS NOT RESPONSIBLE OR LIABLE FOR THE ACCURACY OR COMPLETENESS OF THIS UTILITY INFORMATION. FOR THE ACCURATE LOCATION AND TYPE OF UTILITIES NECESSARY FOR DESIGN AND CONSTRUCTION, PLEASE CONTACT THE SITE OWNER AND THE LOCAL UTILITY LOCATE SERVICE (800–424–5555).
4. SUBJECT PROPERTY TAX PARCEL NO. 1438700110
5. SUBJECT PROPERTY AREA PER THIS SURVEY IS 16,678 S.F. (0.38 ACRES)
6. THIS SURVEY WAS PERFORMED WITHOUT THE BENEFIT OF A TITLE REPORT. EASEMENTS AND OTHER ENCUMBRANCES MAY EXIST THAT ARE NOT SHOWN HEREON.
7. EXISTING STRUCTURE(S) LOCATION AND DIMENSIONS ARE MEASURED FROM THE FACE OF THE SIDING UNLESS OTHERWISE NOTED.
8. FIELD DATA FOR THIS SURVEY WAS OBTAINED BY DIRECT FIELD MEASUREMENTS WITH A CALIBRATED ELECTRONIC 3–SECOND TOTAL STATION AND/OR SURVEY GRADE GPS OBSERVATIONS. ALL ANGULAR AND LINEAR RELATIONSHIPS ARE ACCURATE AND MEET THE STANDARDS SET BY WAC 332–130–090.

LEGEND

	BENCHMARK	PP	POWER POLE
	CENTERLINE ROW		POWER POLE W/ LIGHT
	FENCE LINE (CHAIN LINK)	UP	POWER (UNDERGROUND)
	FENCE LINE (WOOD)	PV	POWER VAULT
IP	IRON PIPE (FOUND)	TEL HH	TELEPHONE HAND HOLE
	MONUMENT (IN CASE, FOUND)	TEL SENTRY	TELEPHONE SENTRY
	NAIL AS NOTED	T	TELEPHONE (OVERHEAD)
	PROPERTY LINES (ADJACENT)	TV HH	TV HAND HOLE
	PROPERTY LINE (SUBJECT)	UT	UTILITY LINE
	REBAR & CAP (SET)		AREA DRAIN
	REBAR AS NOTED (FOUND)		INLET (TYPE 1)
	RETAINING WALL		STORM MANHOLE
	RIGHT–OF–WAY LINES	SD	STORM DRAIN LINE
MB	MAILBOX (RESIDENTIAL)		SEWER MANHOLE
	BUILDING	SS	SEWER LINE
SIZE TYPE	TREE (AS NOTED)		FIRE HYDRANT
	HEDGE FOLIAGE LINE	WM	WATER METER
	ASPHALT SURFACE	WV	WATER VALVE
	CONCRETE SURFACE	W	WATER LINE
	DECK		
	FLAGSTONE SURFACE		UNDERGROUND ELECTRIC SYSTEM EASEMENT PER REC. NO. 5496503
	PAVER SURFACE		TELEPHONE & TELEGRAPH LINES EASEMENT PER REC. NO. 5498347
	ROCKERY		
	STEEP SLOPE AREA		
	HANDRAIL	ACU	AIR CONDITION UNIT
G	GAS METER	BLDG	BUILDING
GV	GAS VALVE	C.C.	CENTER CHANNEL
G	GAS LINE	CALC'D	CALCULATED
P	POWER METER	CONC	CONCRETE

STEEP SLOPE/BUFFER DISCLAIMER:

THE LOCATION AND EXTENT OF STEEP SLOPES SHOWN ON THIS DRAWING ARE FOR INFORMATIONAL PURPOSES ONLY AND CANNOT BE RELIED ON FOR DESIGN AND/OR CONSTRUCTION. THE PITCH, LOCATION, AND EXTENT ARE BASED SOLELY ON OUR GENERAL OBSERVATIONS ON SITE AND OUR CURSORY REVIEW OF READILY AVAILABLE PUBLIC DOCUMENTS; AS SUCH, TERRANE CANNOT BE LIABLE OR RESPONSIBLE FOR THE ACCURACY OR COMPLETENESS OF ANY STEEP SLOPE INFORMATION. ULTIMATELY, THE LIMITS AND EXTENT OF ANY STEEP SLOPES ASSOCIATED WITH ANY SETBACKS OR OTHER DESIGN OR CONSTRUCTION PARAMETERS MUST BE DISCUSSED AND APPROVED BY THE REVIEWING AGENCY BEFORE ANY CONSTRUCTION CAN OCCUR.

SCHEDULE B ITEMS

1. TERMS AND CONDITIONS OF NOTICE OF ADDITIONAL TAP OR CONNECTION CHARGES, RECORDED UNDER RECORDING NO. 7712060812. **"NOT SURVEY RELATED"**

2. COVENANTS, CONDITIONS, RESTRICTIONS, RECITALS, RESERVATIONS, EASEMENTS, EASEMENT PROVISIONS, ENCROACHMENTS, DEDICATIONS, BUILDING SETBACK LINES, NOTES, STATEMENTS, AND OTHER MATTERS, IF ANY, BUT OMITTING ANY COVENANTS OR RESTRICTIONS, IF ANY, INCLUDING BUT NOT LIMITED TO THOSE BASED UPON RACE, COLOR, RELIGION, SEX, SEXUAL ORIENTATION, FAMILIAL STATUS, MARITAL STATUS, DISABILITY, HANDICAP, NATIONAL ORIGIN, ANCESTRY, OR SOURCE OF INCOME, AS SET FORTH IN APPLICABLE STATE OR FEDERAL LAWS, EXCEPT TO THE EXTENT THAT SAID COVENANT OR RESTRICTION IS PERMITTED BY APPLICABLE LAW, AS SET FORTH ON THE PLAT OF CAY HILLS:

   RECORDING NO: 5473100 **"BLANKET IN NATURE"**

3. COVENANTS, CONDITIONS, RESTRICTIONS AND EASEMENTS BUT OMITTING ANY COVENANTS OR RESTRICTIONS, IF ANY, INCLUDING BUT NOT LIMITED TO THOSE BASED UPON RACE, COLOR, RELIGION, SEX, SEXUAL ORIENTATION, FAMILIAL STATUS, MARITAL STATUS, DISABILITY, HANDICAP, NATIONAL ORIGIN, ANCESTRY, SOURCE OF INCOME, GENDER, GENDER IDENTITY, GENDER EXPRESSION, MEDICAL CONDITION OR GENETIC INFORMATION, AS SET FORTH IN APPLICABLE STATE OR FEDERAL LAWS, EXCEPT TO THE EXTENT THAT SAID COVENANT OR RESTRICTION IS PERMITTED BY APPLICABLE LAW, AS SET FORTH IN THE DOCUMENT

   RECORDING DATE: SEPTEMBER 7, 1962
   RECORDING NO.: 5476633 **"BLANKET IN NATURE"**

4. EASEMENT(S) FOR THE PURPOSE(S) SHOWN BELOW AND RIGHTS INCIDENTAL THERETO AS SET FORTH IN A DOCUMENT:

   IN FAVOR OF: PUGET SOUND POWER & LIGHT COMPANY
   PURPOSE: UNDERGROUND ELECTRIC SYSTEM
   RECORDING DATE: OCTOBER 23, 1962
   RECORDING NO.: 5496503
   AFFECTS: AS DESCRIBED THEREIN **"PLOTTED"**

5. EASEMENT(S) FOR THE PURPOSE(S) SHOWN BELOW AND RIGHTS INCIDENTAL THERETO AS SET FORTH IN A DOCUMENT:

   IN FAVOR OF: PACIFIC NORTHWEST BELL TELEPHONE COMPANY
   PURPOSE: TELEPHONE AND TELEGRAPH LINES
   RECORDING DATE: OCTOBER 26, 1962
   RECORDING NO.: 5498347
   AFFECTS: AS DESCRIBED THEREIN **"PLOTTED"**

6. EASEMENT(S) FOR THE PURPOSE(S) SHOWN BELOW AND RIGHTS INCIDENTAL THERETO AS SET FORTH IN A DOCUMENT:

   IN FAVOR OF: MERCER ISLAND SEWER DISTRICT
   PURPOSE: SEWAGE PUMPING STATION AND TIMBER DOCK
   RECORDING DATE: NOVEMBER 25, 1964
   RECORDING NO.: 5815833
   AFFECTS: AS DESCRIBED THEREIN **"AS CONSTRUCTED"**

7. EASEMENT(S) FOR THE PURPOSE(S) SHOWN BELOW AND RIGHTS INCIDENTAL THERETO AS SET FORTH IN A DOCUMENT:

   IN FAVOR OF: MERCER ISLAND SEWER DISTRICT
   PURPOSE: SEWER PIPELINE(S)
   RECORDING DATE: MAY 6, 1965
   RECORDING NO.: 5875585
   AFFECTS: AS DESCRIBED THEREIN **"BLANKET IN NATURE"**

8. AGREEMENT AND THE TERMS AND CONDITIONS THEREOF:

   RECORDING DATE: FEBRUARY 2, 1996
   RECORDING NO.: 9602021145
   REGARDING: MAINTENANCE OF THE COMMUNITY WATERFRONT AND DOCK AND COSTS RELATING THERETO
   "BLANKET IN NATURE"

9. COVENANTS, CONDITIONS, RESTRICTIONS, RECITALS, RESERVATIONS, EASEMENTS, EASEMENT PROVISIONS, ENCROACHMENTS, DEDICATIONS, BUILDING SETBACK LINES, NOTES, STATEMENTS, AND OTHER MATTERS, IF ANY, BUT OMITTING ANY COVENANTS OR RESTRICTIONS, IF ANY, INCLUDING BUT NOT LIMITED TO THOSE BASED UPON RACE, COLOR, RELIGION, SEX, SEXUAL ORIENTATION, FAMILIAL STATUS, MARITAL STATUS, DISABILITY, HANDICAP, NATIONAL ORIGIN, ANCESTRY, OR SOURCE OF INCOME, AS SET FORTH IN APPLICABLE STATE OR FEDERAL LAWS, EXCEPT TO THE EXTENT THAT SAID COVENANT OR RESTRICTION IS PERMITTED BY APPLICABLE LAW, AS SET FORTH ON SURVEY:

   RECORDING NO: 20031008900001
   "CURRENT CONDITIONS SHOWN"

10. INDEMNIFICATION AND HOLD HARMLESS AGREEMENT AND THE TERMS AND CONDITIONS THEREOF:

    RECORDING DATE: AUGUST 8, 2013
    RECORDING NO.: 20130808000095 **"BLANKET IN NATURE"**

11. INDEMNIFICATION AND HOLD HARMLESS AGREEMENT AND THE TERMS AND CONDITIONS THEREOF:

    RECORDING DATE: APRIL 21, 2014
    RECORDING NO.: 20140421001049**"BLANKET IN NATURE"**

VICINITY MAP

N.T.S.

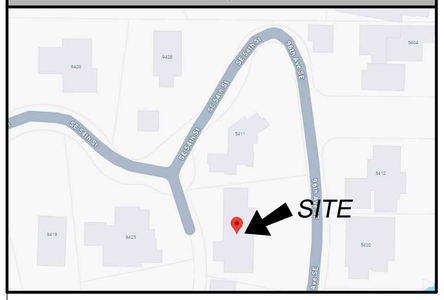

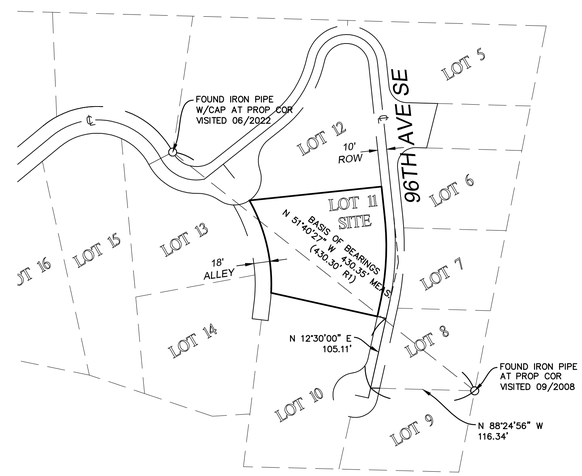

CONTROL MAP

N.T.S.

INDEXING INFORMATION

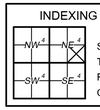

SE 1/4 NE 1/4
SECTION: 19
TOWNSHIP: 24N
RANGE: 05E, W.M.
COUNTY: KING

We are the measure | terrane.net

TOPOGRAPHIC & BOUNDARY SURVEY
PARCEL NO. 1438700110

5419 96TH AVE SE
5419 96TH AVENUE SOUTHEAST
MERCER ISLAND, WA 98040

JASON PARSONS SAUNDERS STATE OF WASHINGTON 40486 REGISTERED PROFESSIONAL LAND SURVEYOR
06/20/25

TERRANE
11235 SE 6th St, Suite 130
Bellevue, WA 98004
p: 425-458-4488 | e: info@terrane.net

JOB NUMBER:	250938
DATE:	06/20/25
DRAFTED BY:	CAS
CHECKED BY:	JPS
SCALE:	N.T.S.

REVISION HISTORY

SHEET NUMBER
1 OF 2

TOPOGRAPHIC & BOUNDARY SURVEY

STEEP SLOPE/BUFFER DISCLAIMER:

THE LOCATION AND EXTENT OF STEEP SLOPES SHOWN ON THIS DRAWING ARE FOR INFORMATIONAL PURPOSES ONLY AND CANNOT BE RELIED ON FOR DESIGN AND/OR CONSTRUCTION. THE PITCH, LOCATION, AND EXTENT ARE BASED SOLELY ON OUR GENERAL OBSERVATIONS ON SITE AND OUR CURSORY REVIEW OF READILY AVAILABLE PUBLIC DOCUMENTS; AS SUCH, TERRANE CANNOT BE LIABLE OR RESPONSIBLE FOR THE ACCURACY OR COMPLETENESS OF ANY STEEP SLOPE INFORMATION. ULTIMATELY, THE LIMITS AND EXTENT OF ANY STEEP SLOPES ASSOCIATED WITH ANY SETBACKS OR OTHER DESIGN OR CONSTRUCTION PARAMETERS MUST BE DISCUSSED AND APPROVED BY THE REVIEWING AGENCY BEFORE ANY CONSTRUCTION CAN OCCUR.

INDEXING INFORMATION

NW 4 | NE 4 | SW 4 | SE 4

SECTION: 19
TOWNSHIP: 24N
RANGE: 05E, W.M.
COUNTY: KING

We are the measure | terrane.net

TOPOGRAPHIC & BOUNDARY SURVEY
PARCEL NO. 1438700110

5419 96TH AVE SE

5419 96TH AVENUE SOUTHEAST
MERCER ISLAND, WA 98040

JEFFREY PASON SAWICZ STATE OF WASHINGTON REGISTERED PROFESSIONAL LAND SURVEYOR

On Pad 105

TERRANE
11235 SE 6th St. Suite 130
Bellevue, WA 98004
p: 425-458-4488 | e: info@terrane.net

JOB NUMBER:	250938
DATE:	06/20/25
DRAFTED BY:	CAS
CHECKED BY:	JPS
SCALE:	1"= 10'

REVISION HISTORY

SHEET NUMBER
2 OF 2

DEMO LEGEND:

- EXISTING WALL TO REMAIN
- WALL TO BE REMOVED
- EXISTING WINDOW TO REMAIN
- WINDOW TO BE REMOVED
- EXISTING DOOR TO REMAIN
- DOOR TO BE REMOVED
- ROOF TO BE REMOVED
- STAIR/CASEWORK/OTHER TO BE REMOVED

DEMO NOTES:

1. CONTRACTOR TO VERIFY STRUCTURAL BEARING OF ALL ARCHITECTURAL ELEMENTS, INCLUDING WALLS + COLUMNS, + PROVIDE TEMPORARY SHORING PER STRUCTURAL ENGINEER AS REQUIRED PRIOR TO DEMOLITION.
2. ALL DEMOLITION SHALL BE PERFORMED IN SUCH A MANNER TO MINIMIZE COLLATERAL DAMAGE TO SURROUNDING AREAS.
3. SALVAGE ALL EXISTING WINDOWS, DOORS, PLUMBING FIXTURES, FLOORING, TRIM, ETC. IF POSSIBLE. CONFIRM REUSE WITH RIPPLE DESIGN STUDIO + CLIENT PRIOR TO DISPOSAL.

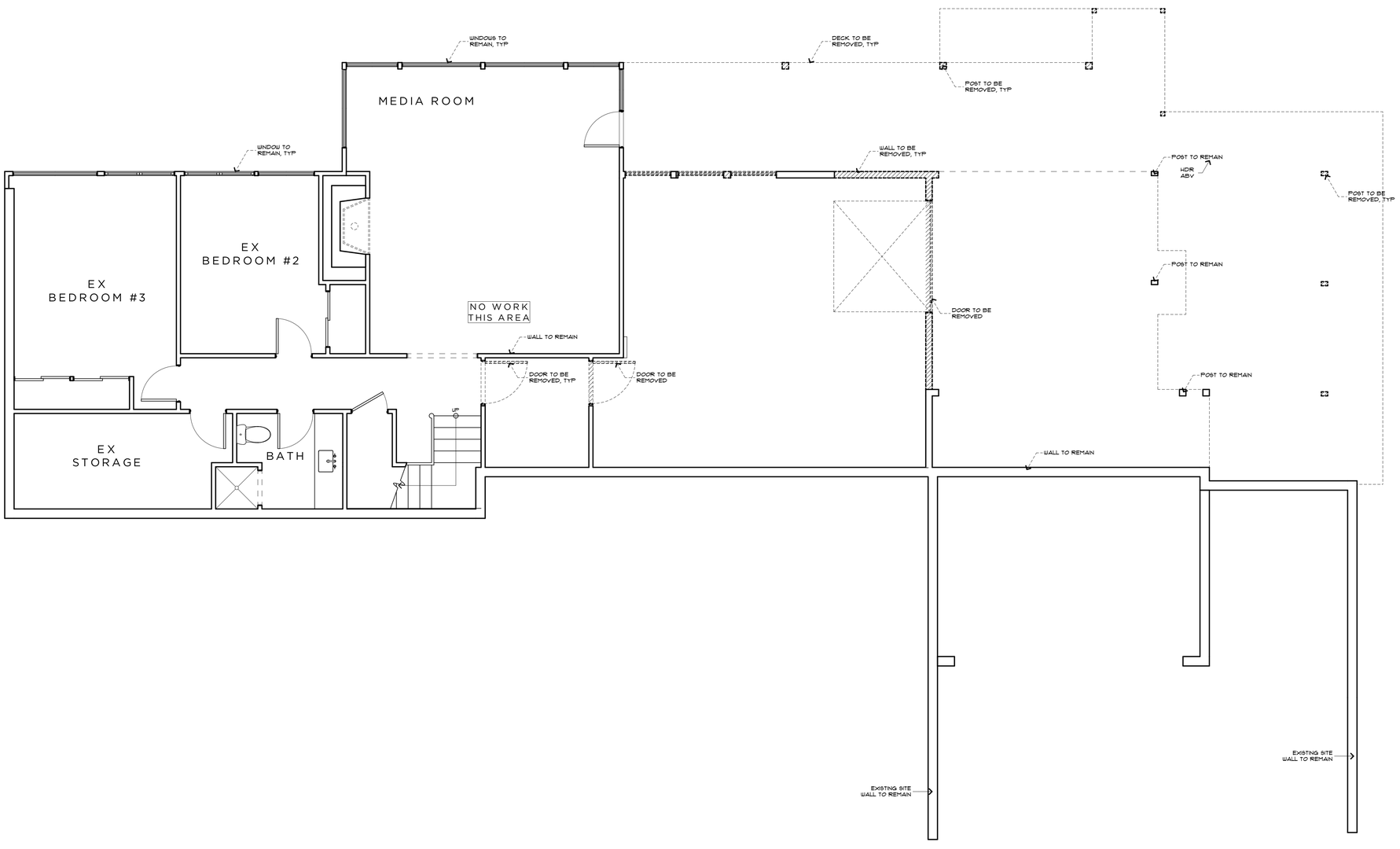

BASEMENT DEMOLITION PLAN

SCALE: 1/4" = 1'-0"

N

RIPPLE
DESIGN STUDIO
206.913.2333
4303 STONE WAY N
SEATTLE, WA 98103

9790 REGISTERED ARCHITECT
JAMES M DEARTH
STATE OF WASHINGTON

ALPAY RESIDENCE
5419 96TH AVE SE MERCER ISLAND, WA 98040

BASEMENT DEMOLITION PLAN

THIS DRAWING, AS AN INSTRUMENT OF SERVICE, IS + SHALL REMAIN THE SOLE PROPERTY OF RIPPLE DESIGN STUDIO + SHALL NOT BE REPRODUCED, PUBLISHED, OR USED IN ANY MANNER WITHOUT PROPER AUTHORIZATION. COPYRIGHT © 2025 BY RIPPLE DESIGN STUDIO

RELEASE

PERMIT RESPONSE
9 DECEMBER 2025

CAR-2 PERMIT SUBMITTAL
23 DECEMBER 2025

PERMIT RESPONSE
7 JANUARY 2026

PERMIT RESPONSE
26 FEBRUARY 2026

D1.0

ALPAY
AUTHORIZED 2026.02.26

DEMO LEGEND:

- EXISTING WALL TO REMAIN
- WALL TO BE REMOVED
- EXISTING WINDOW TO REMAIN
- WINDOW TO BE REMOVED
- EXISTING DOOR TO REMAIN
- DOOR TO BE REMOVED
- ROOF TO BE REMOVED
- STAIR/CASEWORK/OTHER TO BE REMOVED

DEMO NOTES:

1. CONTRACTOR TO VERIFY STRUCTURAL BEARING OF ALL ARCHITECTURAL ELEMENTS, INCLUDING WALLS + COLUMNS, + PROVIDE TEMPORARY SHORING PER STRUCTURAL ENGINEER AS REQUIRED PRIOR TO DEMOLITION.
2. ALL DEMOLITION SHALL BE PERFORMED IN SUCH A MANNER TO MINIMIZE COLLATERAL DAMAGE TO SURROUNDING AREAS.
3. SALVAGE ALL EXISTING WINDOWS, DOORS, PLUMBING FIXTURES, FLOORING, TRIM, ETC. IF POSSIBLE. CONFIRM REUSE WITH RIPPLE DESIGN STUDIO + CLIENT PRIOR TO DISPOSAL.

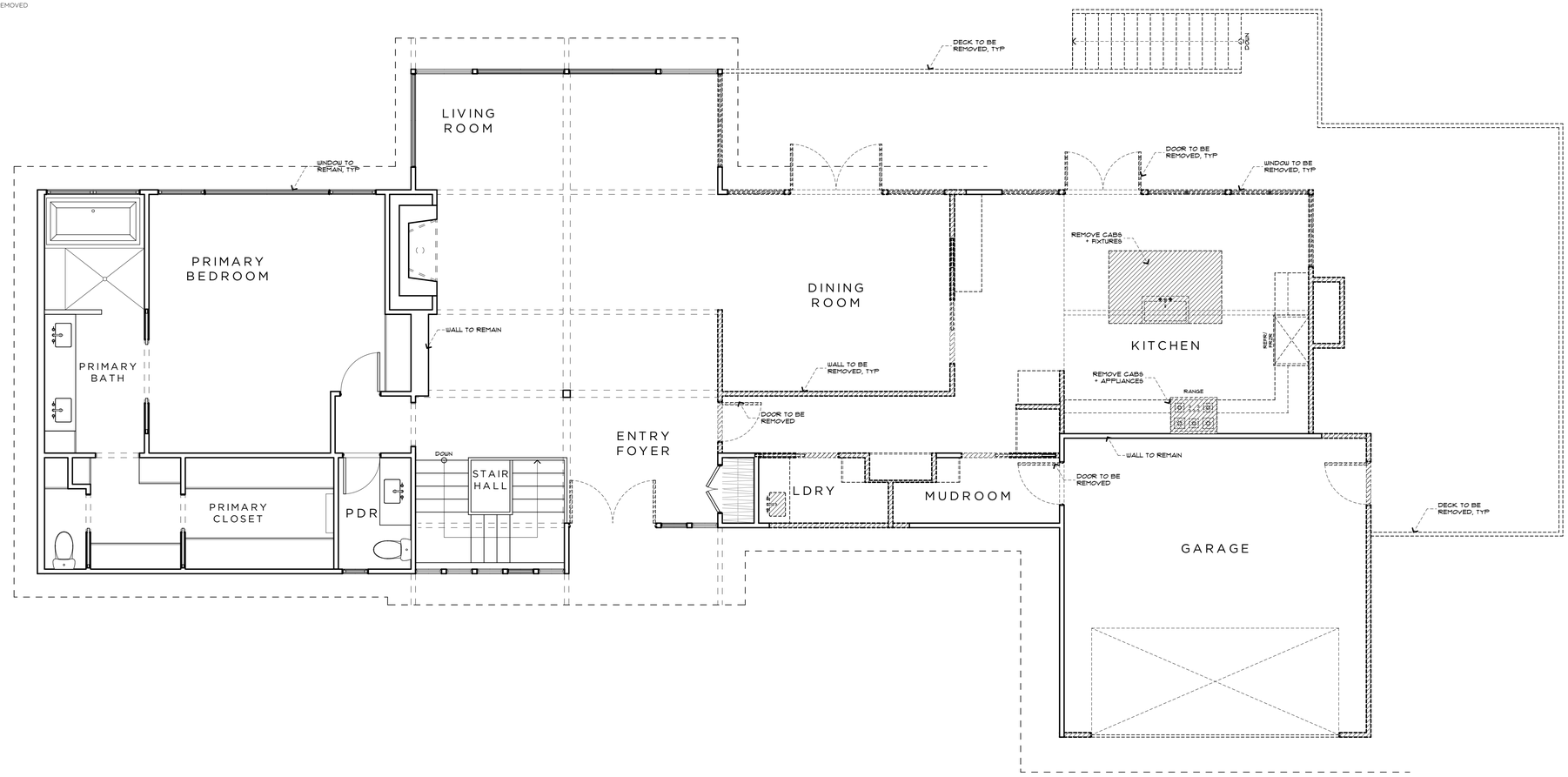

FIRST FLOOR DEMOLITION PLAN

SCALE: 1/4" = 1'-0"

N

RIPPLE
DESIGN STUDIO
206.913.2333
4303 STONE WAY N
SEATTLE, WA 98103

9790 REGISTERED ARCHITECT
JAMES M DEARTH
STATE OF WASHINGTON

ALPAY RESIDENCE
5419 96TH AVE SE
MERCER ISLAND, WA
98040

FIRST FLOOR DEMOLITION PLAN

THIS DRAWING, AS AN INSTRUMENT OF SERVICE, IS + SHALL REMAIN THE SOLE PROPERTY OF RIPPLE DESIGN STUDIO + SHALL NOT BE REPRODUCED, PUBLISHED, OR USED IN ANY MANNER WITHOUT PROPER AUTHORIZATION.
COPYRIGHT © 2025 BY RIPPLE DESIGN STUDIO

RELEASE

PERMIT RESPONSE
9 DECEMBER 2025

CAR-2 PERMIT SUBMITTAL
23 DECEMBER 2025

PERMIT RESPONSE
7 JANUARY 2026

PERMIT RESPONSE
26 FEBRUARY 2026

D1.1

FLOOR AREAS:

LOT AREA:	16,678 FT²
MAXIMUM ALLOWABLE GFA (R-15, 12,000 or 40%):	(40%) 6,671.20 FT²
EX BASEMENT FLOOR AREA:	1,193 FT²
EX BASEMENT 'GARAGE' AREA:	495 FT²
NEW BASEMENT FLOOR AREA:	751 FT²
NEW BASEMENT 'EXTERIOR' STORAGE AREA:	[163 FT²]
TOTAL BASEMENT FLOOR AREA UPON COMPLETION:	2,603 FT²
EX FIRST FLOOR AREA:	1,881 FT²
NEW FIRST FLOOR AREA:	494 FT²
NEW FIRST FLOOR COVERED DECK:	248 FT²
TOTAL FIRST FLOOR AREA UPON COMPLETION:	2,623 FT²
TOTAL FLOOR AREA UPON COMPLETION:	**5,226 FT²**
EXISTING GARAGE FLOOR AREA:	384 FT²
PROPOSED GARAGE FLOOR AREA:	270 FT²
TOTAL GARAGE AREA UPON COMPLETION:	**654 FT²**
TOTAL GROSS FLOOR AREA UPON COMPLETION:	**(35.2%) 5,879 FT²**

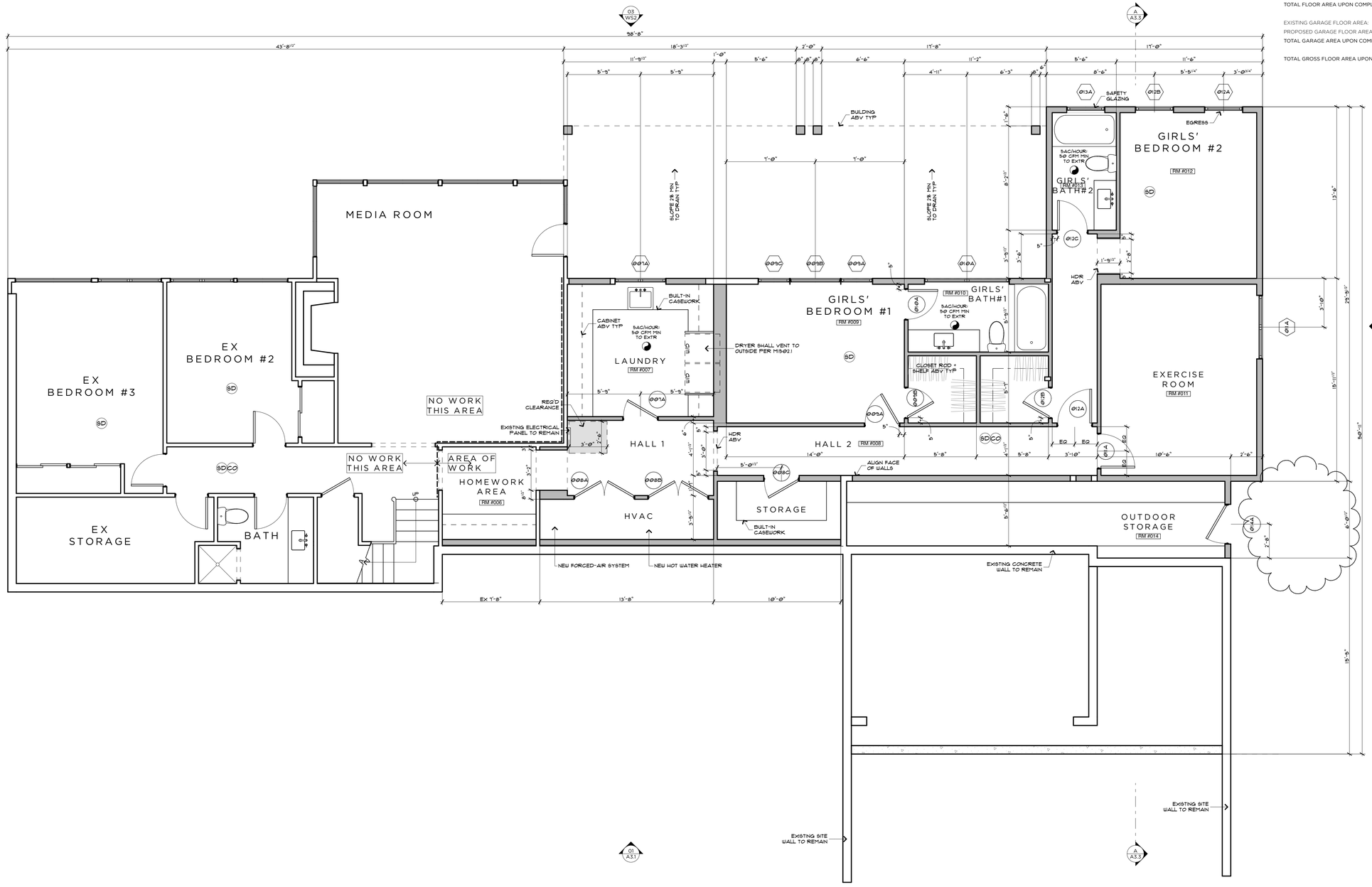

BASEMENT PLAN

SCALE: 1/4" = 1'-0"

RIPPLE
DESIGN STUDIO
206.913.2333
4303 STONE WAY N
SEATTLE, WA 98103

9790 REGISTERED ARCHITECT
JAMES M DEARTH
STATE OF WASHINGTON

ALPAY RESIDENCE
5419 96TH AVE SE
MERCER ISLAND, WA
98040

BASEMENT FLOOR PLAN

THIS DRAWING, AS AN INSTRUMENT OF SERVICE, IS + SHALL REMAIN THE SOLE PROPERTY OF RIPPLE DESIGN STUDIO + SHALL NOT BE REPRODUCED, PUBLISHED, OR USED IN ANY MANNER WITHOUT PROPER AUTHORIZATION. COPYRIGHT © 2025 BY RIPPLE DESIGN STUDIO

RELEASE

PERMIT RESPONSE
9 DECEMBER 2025

CAR-2 PERMIT SUBMITTAL
23 DECEMBER 2025

PERMIT RESPONSE
7 JANUARY 2026

PERMIT RESPONSE
26 FEBRUARY 2026

A2.0

ALPAY
AUTHORED: 2/27/26

FLOOR AREAS:

LOT AREA:	16,678 FT²
MAXIMUM ALLOWABLE GFA (R-15, 12,000 or 40%):	(40%) 6,671.20 FT²
EX BASEMENT FLOOR AREA:	1,193 FT²
EX BASEMENT 'GARAGE' AREA:	495 FT²
NEW BASEMENT FLOOR AREA:	751 FT²
NEW BASEMENT 'EXTERIOR STORAGE AREA:	[163 FT²]
TOTAL BASEMENT FLOOR AREA UPON COMPLETION:	2,603 FT²
EX FIRST FLOOR AREA:	1,881 FT²
NEW FIRST FLOOR AREA:	494 FT²
NEW FIRST FLOOR COVERED DECK:	248 FT²
TOTAL FIRST FLOOR AREA UPON COMPLETION:	2,623 FT²
TOTAL FLOOR AREA UPON COMPLETION:	**5,226 FT²**
EXISTING GARAGE FLOOR AREA:	384 FT²
PROPOSED GARAGE FLOOR AREA:	270 FT²
TOTAL GARAGE AREA UPON COMPLETION:	654 FT²
TOTAL GROSS FLOOR AREA UPON COMPLETION:	(35.2%) 5,879 FT²

RIPPLE
DESIGN STUDIO
206.913.2333
4303 STONE WAY N
SEATTLE, WA 98103

9790 REGISTERED ARCHITECT
JAMES M DEARTH
STATE OF WASHINGTON

ALPAY RESIDENCE
5419 96TH AVE SE
MERCER ISLAND, WA 98040

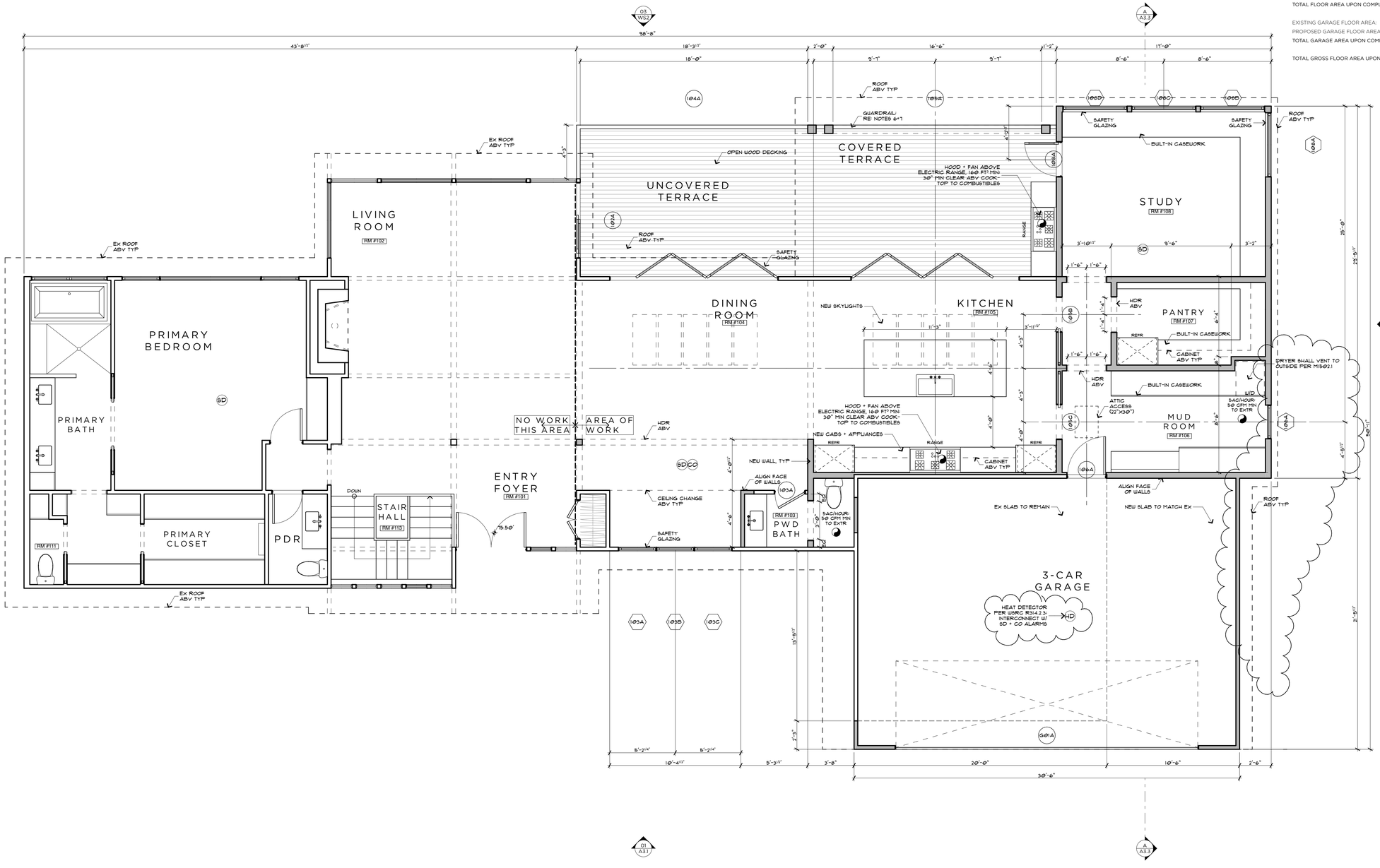

FIRST FLOOR PLAN

SCALE: 1/4" = 1'-0"

FIRST FLOOR PLAN

THIS DRAWING, AS AN INSTRUMENT OF SERVICE, IS + SHALL REMAIN THE SOLE PROPERTY OF RIPPLE DESIGN STUDIO + SHALL NOT BE REPRODUCED, PUBLISHED, OR USED IN ANY MANNER WITHOUT PROPER AUTHORIZATION. COPYRIGHT © 2025 BY RIPPLE DESIGN STUDIO

RELEASE

PERMIT RESPONSE
9 DECEMBER 2025

CAR-2 PERMIT SUBMITTAL
23 DECEMBER 2025

PERMIT RESPONSE
7 JANUARY 2026

PERMIT RESPONSE
26 FEBRUARY 2026

A2.1

ALPAY

ROOF PLAN

SCALE: 1/4" = 1'-0"

N

RIPPLE
DESIGN STUDIO
206.913.2333
4303 STONE WAY N
SEATTLE, WA 98103

9790 REGISTERED ARCHITECT
JAMES M DEARTH
STATE OF WASHINGTON

ALPAY RESIDENCE
5419 96TH AVE SE
MERCER ISLAND, WA
98040

ROOF PLAN

THIS DRAWING, AS AN INSTRUMENT OF SERVICE, IS + SHALL REMAIN THE SOLE PROPERTY OF RIPPLE DESIGN STUDIO + SHALL NOT BE REPRODUCED, PUBLISHED, OR USED IN ANY MANNER WITHOUT PROPER AUTHORIZATION.
COPYRIGHT © 2025 BY RIPPLE DESIGN STUDIO

RELEASE

PERMIT RESPONSE
9 DECEMBER 2025

CAR-2 PERMIT SUBMITTAL
23 DECEMBER 2025

PERMIT RESPONSE
7 JANUARY 2026

PERMIT RESPONSE
26 FEBRUARY 2026

A2.2

ALPAY
AUTHORED 12/17/25

AVERAGE BUILDING ELEVATION CALCS:

ELEVATION POINT "A"	75.30
SEGMENT LENGTH "A"	30.50
ELEV "A" x SEGMENT "A"	**2,296.65**
ELEVATION POINT "B"	73.00
SEGMENT LENGTH "B"	15.71
ELEV "B" x SEGMENT "B"	**1,146.83**
ELEVATION POINT "C"	74.00
SEGMENT LENGTH "C"	31.33
ELEV "C" x SEGMENT "C"	**2,318.42**
ELEVATION POINT "D"	75.45
SEGMENT LENGTH "D"	3.00
ELEV "D" x SEGMENT "D"	**226.35**
ELEVATION POINT "E"	73.60
SEGMENT LENGTH "E"	34.25
ELEV "E" x SEGMENT "E"	**2,520.80**
ELEVATION POINT "F"	64.10
SEGMENT LENGTH "F"	24.70
ELEV "F" x SEGMENT "F"	**1,583.27**
ELEVATION POINT "G"	65.20
SEGMENT LENGTH "G"	24.00
ELEV "G" x SEGMENT "G"	**1,564.80**
ELEVATION POINT "H"	65.50
SEGMENT LENGTH "H"	7.75
ELEV "H" x SEGMENT "H"	**507.63**
ELEVATION POINT "I"	66.00
SEGMENT LENGTH "I"	20.00
ELEV "I" x SEGMENT "I"	**1,320.00**
ELEVATION POINT "J"	66.70
SEGMENT LENGTH "J"	7.75
ELEV "J" x SEGMENT "J"	**516.93**
ELEVATION POINT "K"	66.60
SEGMENT LENGTH "K"	14.50
ELEV "K" x SEGMENT "K"	**965.70**
ELEVATION POINT "L"	66.30
SEGMENT LENGTH "L"	50.00
ELEV "L" x SEGMENT "L"	**3,315.00**
ELEVATION POINT "M"	64.50
SEGMENT LENGTH "M"	17.00
ELEV "M" x SEGMENT "M"	**1,096.50**
ELEVATION POINT "N"	66.00
SEGMENT LENGTH "N"	30.50
ELEV "N" x SEGMENT "N"	**2,013.00**
ELEVATION POINT "O"	66.90
SEGMENT LENGTH "O"	2.50
ELEV "O" x SEGMENT "O"	**167.25**
ELEVATION POINT "P"	70.00
SEGMENT LENGTH "P"	21.50
ELEV "P" x SEGMENT "P"	**1,505.00**
TOTAL OF ELEVATION POINTS x SEGMENT LENGHTS	**23,064.12**
TOTAL SEGMENT LENGTHS	**334.99**
AVERAGE GRADE	**68.85**

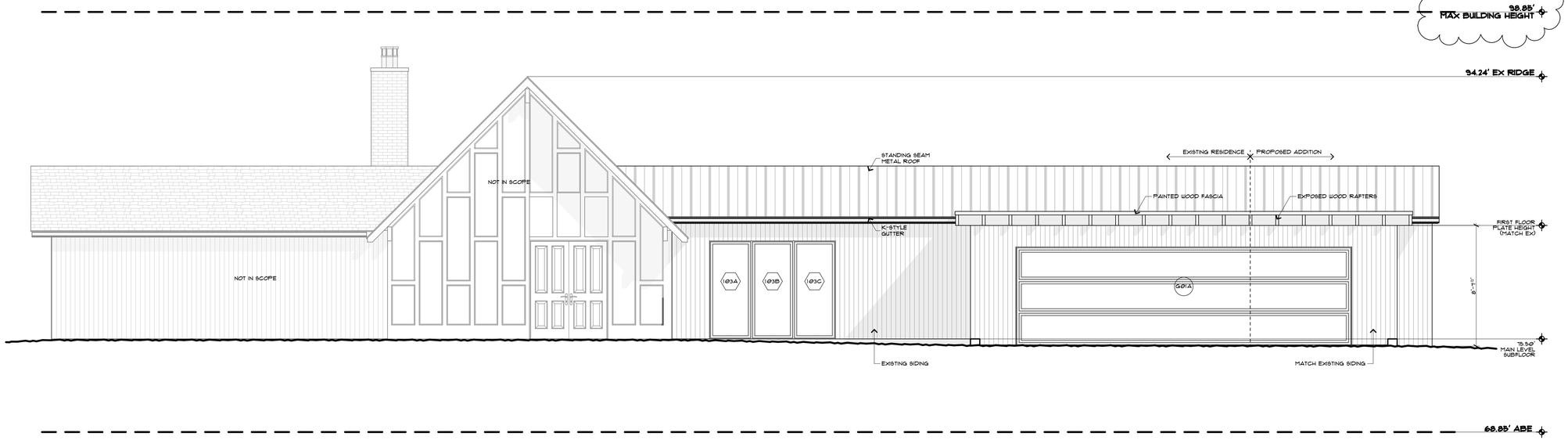

WEST ELEVATION 01

SCALE: 1/4" = 1'-0"

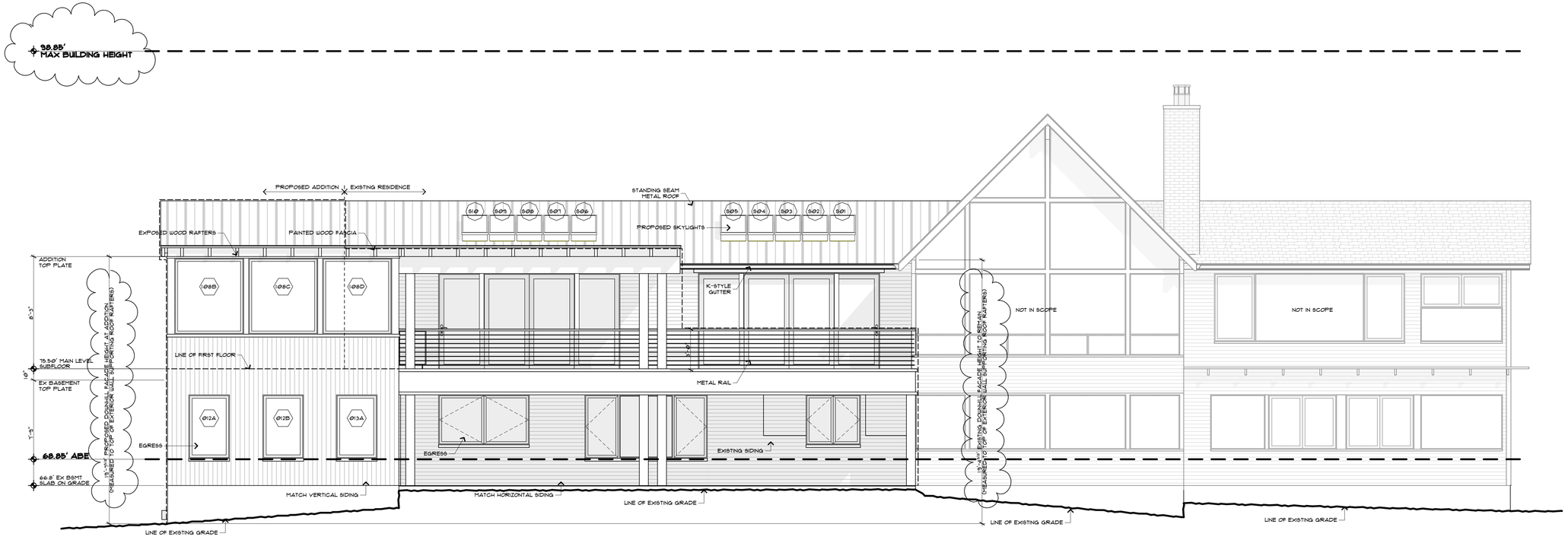

EAST ELEVATION 03

SCALE: 1/4" = 1'-0"

RIPPLE
DESIGN STUDIO
206.913.2333
4303 STONE WAY N
SEATTLE, WA 98103

9790 REGISTERED ARCHITECT
JAMES M DEARTH
STATE OF WASHINGTON

ALPAY RESIDENCE
5419 96TH AVE SE
MERCER ISLAND, WA
98040

SOUTH + NORTH BUILDING ELEVATIONS

THIS DRAWING, AS AN INSTRUMENT OF SERVICE IS + SHALL REMAIN THE SOLE PROPERTY OF RIPPLE DESIGN STUDIO+ SHALL NOT BE REPRODUCED, PUBLISHED, OR USED IN ANY MANNER WITHOUT PROPER AUTHORIZATION. COPYRIGHT © 2025 BY RIPPLE DESIGN STUDIO

RELEASE

PERMIT RESPONSE
9 DECEMBER 2025

CAR-2 PERMIT SUBMITTAL
23 DECEMBER 2025

PERMIT RESPONSE
7 JANUARY 2026

PERMIT RESPONSE
26 FEBRUARY 2026

A3.1

ALPAY
AUTHORED: 2/27/26

AVERAGE BUILDING ELEVATION CALCS:

ELEVATION POINT "A"	75.30
SEGMENT LENGTH "A"	30.50
ELEV "A" x SEGMENT "A"	**2,296.65**
ELEVATION POINT "B"	73.00
SEGMENT LENGTH "B"	15.71
ELEV "B" x SEGMENT "B"	**1,146.83**
ELEVATION POINT "C"	74.00
SEGMENT LENGTH "C"	31.33
ELEV "C" x SEGMENT "C"	**2,318.42**
ELEVATION POINT "D"	75.45
SEGMENT LENGTH "D"	3.00
ELEV "D" x SEGMENT "D"	**226.35**
ELEVATION POINT "E"	73.60
SEGMENT LENGTH "E"	34.25
ELEV "E" x SEGMENT "E"	**2,520.80**
ELEVATION POINT "F"	64.10
SEGMENT LENGTH "F"	24.70
ELEV "F" x SEGMENT "F"	**1,583.27**
ELEVATION POINT "G"	65.20
SEGMENT LENGTH "G"	24.00
ELEV "G" x SEGMENT "G"	**1,564.80**
ELEVATION POINT "H"	65.50
SEGMENT LENGTH "H"	7.75
ELEV "H" x SEGMENT "H"	**507.63**
ELEVATION POINT "I"	66.00
SEGMENT LENGTH "I"	20.00
ELEV "I" x SEGMENT "I"	**1,320.00**
ELEVATION POINT "J"	66.70
SEGMENT LENGTH "J"	7.75
ELEV "J" x SEGMENT "J"	**516.93**
ELEVATION POINT "K"	66.60
SEGMENT LENGTH "K"	14.50
ELEV "K" x SEGMENT "K"	**965.70**
ELEVATION POINT "L"	66.30
SEGMENT LENGTH "L"	50.00
ELEV "L" x SEGMENT "L"	**3,315.00**
ELEVATION POINT "M"	64.50
SEGMENT LENGTH "M"	17.00
ELEV "M" x SEGMENT "M"	**1,096.50**
ELEVATION POINT "N"	66.00
SEGMENT LENGTH "N"	30.50
ELEV "N" x SEGMENT "N"	**2,013.00**
ELEVATION POINT "O"	66.90
SEGMENT LENGTH "O"	2.50
ELEV "O" x SEGMENT "O"	**167.25**
ELEVATION POINT "P"	70.00
SEGMENT LENGTH "P"	21.50
ELEV "P" x SEGMENT "P"	**1,505.00**
TOTAL OF ELEVATION POINTS x SEGMENT LENGHTS	**23,064.12**
TOTAL SEGMENT LENGTHS	**334.99**
AVERAGE GRADE	**68.85**

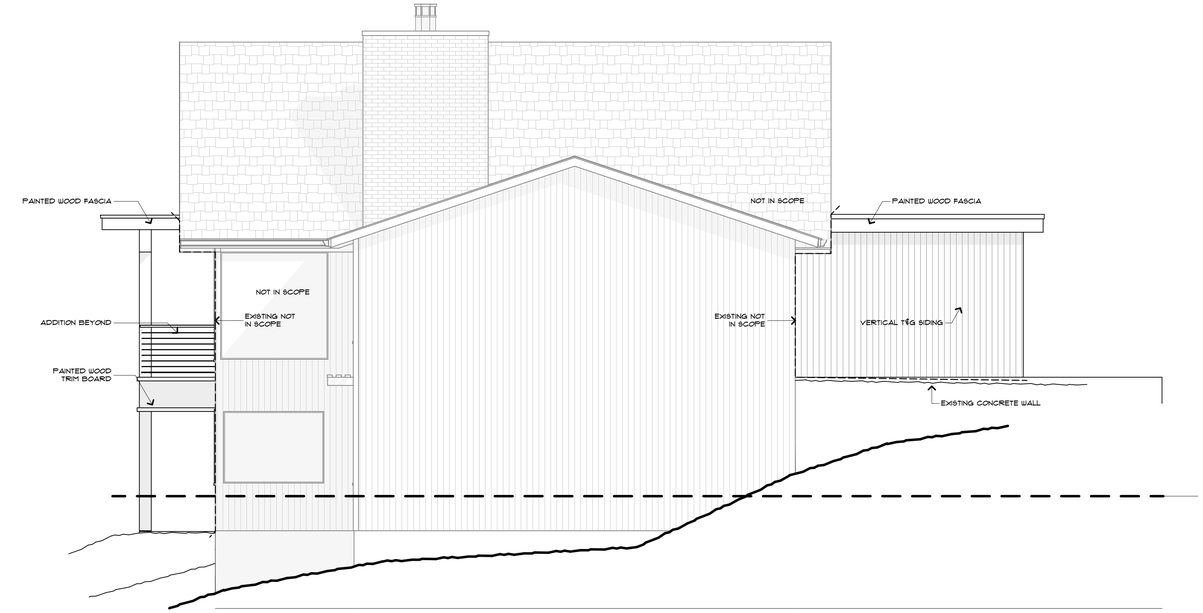

NORTH ELEVATION 02

SCALE: 1/4" = 1'-0"

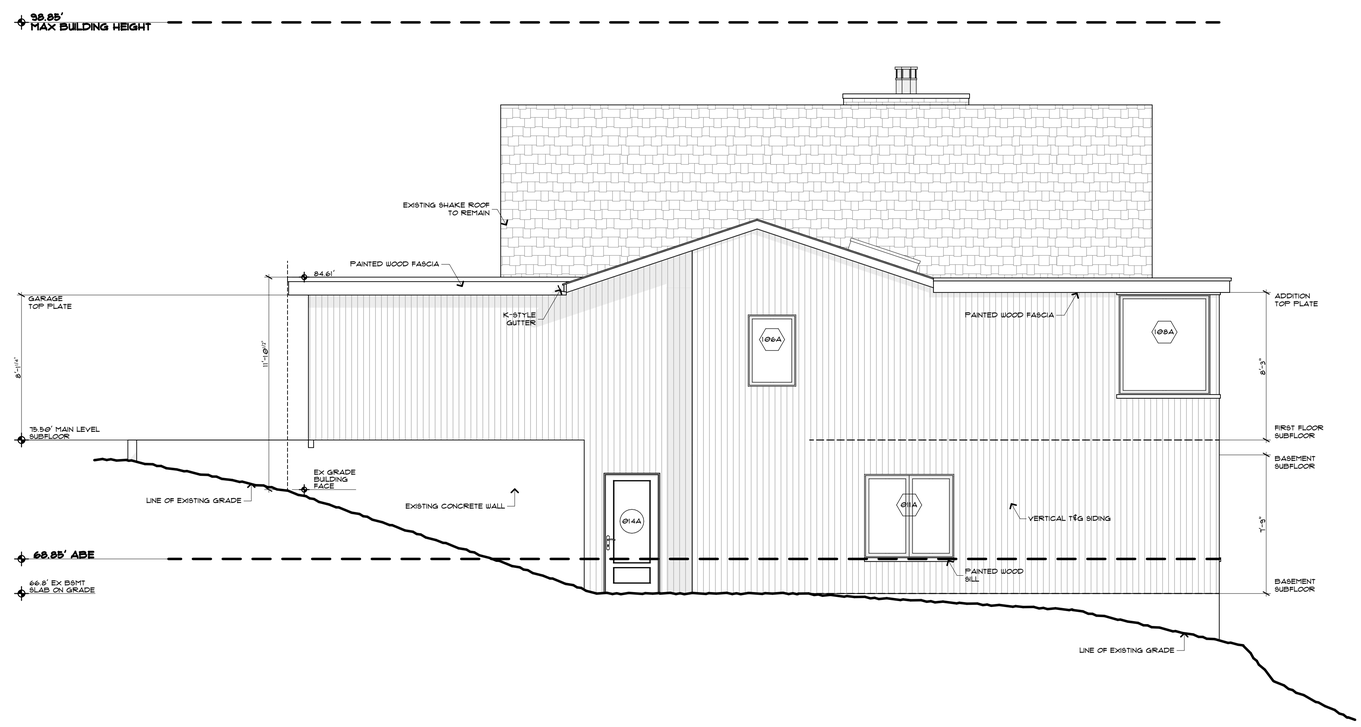

SOUTH ELEVATION 04

SCALE: 1/4" = 1'-0"

RIPPLE
DESIGN STUDIO
206.913.2333
4303 STONE WAY N
SEATTLE, WA 98103

9790 REGISTERED ARCHITECT
JAMES M DEARTH
STATE OF WASHINGTON

ALPAY RESIDENCE
5419 96TH AVE SE
MERCER ISLAND, WA
98040

NORTH + WEST BUILDING ELEVATIONS

THIS DRAWING, AS AN INSTRUMENT OF SERVICE IS + SHALL REMAIN THE SOLE PROPERTY OF RIPPLE DESIGN STUDIO + SHALL NOT BE REPRODUCED, PUBLISHED, OR USED IN ANY MANNER WITHOUT PROPER AUTHORIZATION. COPYRIGHT © 2025 BY RIPPLE DESIGN STUDIO

RELEASE

PERMIT RESPONSE
9 DECEMBER 2025

CAR-2 PERMIT SUBMITTAL
23 DECEMBER 2025

PERMIT RESPONSE
7 JANUARY 2026

PERMIT RESPONSE
26 FEBRUARY 2026

A3.2

ALPAY
AUTHORED: 2/27/26

SECTION + ELEVATION NOTES:

1. CHIMNEY SHALL EXTEND A MIN OF 2'-0" ABV ROOF OR PARAPET WITHIN 10'-0" RADIUS OF CHIMNEY. PROVIDE APPROVED SPARK ARRESTOR @ ALL CHIMNEY CAPS. ALL ARCHITECTURAL FEATURES MUST BE PERMITTED BY FLU + SPARK ARRESTOR MFR APPROVAL.
2. OPEN GUARDRAILS SHALL HAVE INTERMEDIATE RAILS OR ORNAMENTAL PATTERN SUCH THAT A 4" SPHERE CANNOT PASS THROUGH.

WINDOW SCHEDULE:

ALL SCHEDULED DIMENSIONS ARE NOMINAL. RE: MFR DOCUMENTATION + HEAD HEIGHT DETAIL, THIS SHEET, FOR ACTUAL DIMENSIONS

WDW #	WIDTH	HEIGHT	HEADER	TYPE	FINISH	GLAZING	WDW COVERING	OPERATION	HARDWARE	NOTES
007A	4'-0"	3'-8"	6'-8"	CASEMENT	PAINTED	NONE	---	---	TBD	
009A	2'-6"	4'-8"	6'-8"	CASEMENT	PAINTED	NONE	---	---	TBD	EGRESS
009B	4'-0"	4'-8"	6'-8"	FIXED	PAINTED	NONE	---	---	TBD	
009C	2'-6"	4'-8"	6'-8"	CASEMENT	PAINTED	NONE	---	---	TBD	EGRESS
010A	6'-8"	3'-8"	6'-8"	CASEMENT	PAINTED	NONE	---	---	TBD	
011A	5'-0"	4'-8"	6'-8"	CASEMENT	PAINTED	NONE	---	---	TBD	
012A	3'-0"	4'-8"	6'-8"	CASEMENT	PAINTED	NONE	---	---	TBD	EGRESS
012B	3'-0"	4'-8"	6'-8"	CASEMENT	PAINTED	NONE	---	---	TBD	EGRESS
013A	3'-0"	4'-8"	6'-8"	FIXED	PAINTED	NONE	---	---	TBD	
103A	3'-0"	7'-0"	7'-0"	FIXED	PAINTED	NONE	---	---	TBD	
103B	3'-0"	7'-0"	7'-0"	FIXED	PAINTED	NONE	---	---	TBD	
103C	3'-0"	7'-0"	7'-0"	FIXED	PAINTED	NONE	---	---	TBD	
106A	2'-8"	4'-0"	7'-0"	FIXED	PAINTED	NONE	---	---	TBD	
108A	5'-1"	5'-7"	8'-1 1/2"	FIXED	PAINTED	NONE	---	---	TBD	
108B	5'-1"	5'-7"	8'-1 1/2"	FIXED	PAINTED	NONE	---	---	TBD	
108C	5'-1"	5'-7"	8'-1 1/2"	FIXED	PAINTED	NONE	---	---	TBD	
108D	5'-1"	5'-7"	8'-1 1/2"	FIXED	PAINTED	NONE	---	---	TBD	

EXTERIOR DOOR SCHEDULE:

ALL SCHEDULED DIMENSIONS ARE NOMINAL. RE: MFR DOCUMENTATION + HEAD HEIGHT DETAIL, THIS SHEET, FOR ACTUAL DIMENSIONS

DOOR #	WIDTH	HEIGHT	TYPE	DOOR LEAF	MATERIAL	FINISH	GLAZING	HARDWARE	NOTES
014A	3'-0"	6'-8"	SWING	PANEL	WOOD	PAINTED	NONE	TBD	
102A	6'-0"	7'-0"	SLIDER	FULL LIGHT	CLAD WOOD	PAINTED	LoE3 366	TBD	
104A	13'-4"	7'-0"	MULTI-SLIDE	FULL LIGHT	CLAD WOOD	PAINTED	LoE3 366	TBD	
105A	13'-4"	7'-0"	MULTI-SLIDE	FULL LIGHT	CLAD WOOD	PAINTED	LoE3 366	TBD	
108A	2'-8"	7'-0"	SWING	PANEL	WOOD	PAINTED	NONE	TBD	
G01A	24'-0"	7'-0"	OVERHEAD	PANEL	STEEL	PAINTED	NONE	TBD	

SKYLIGHT SCHEDULE:

ALL SCHEDULED DIMENSIONS ARE NOMINAL. RE: MFR DOCUMENTATION + HEAD HEIGHT DETAIL, THIS SHEET, FOR ACTUAL DIMENSIONS

WDW #	WIDTH	HEIGHT	TYPE	FINISH	GLAZING	HARDWARE	NOTES
S01	1'-10"	4'-0"	FIXED	PAINTED	LoE3 366	TBD	
S02	1'-10"	4'-0"	FIXED	PAINTED	LoE3 366	TBD	
S03	1'-10"	4'-0"	FIXED	PAINTED	LoE3 366	TBD	
S04	1'-10"	4'-0"	FIXED	PAINTED	LoE3 366	TBD	
S05	1'-10"	4'-0"	FIXED	PAINTED	LoE3 366	TBD	
S06	1'-10"	4'-0"	FIXED	PAINTED	LoE3 366	TBD	
S07	1'-10"	4'-0"	FIXED	PAINTED	LoE3 366	TBD	
S08	1'-10"	4'-0"	FIXED	PAINTED	LoE3 366	TBD	
S09	1'-10"	4'-0"	FIXED	PAINTED	LoE3 366	TBD	
S10	1'-10"	4'-0"	FIXED	PAINTED	LoE3 366	TBD	

INTERIOR DOOR SCHEDULE:

ALL SCHEDULED DIMENSIONS ARE NOMINAL. RE: HEAD HEIGHT DETAIL, THIS SHEET, FOR ACTUAL DIMENSIONS

DOOR #	WIDTH	HEIGHT	TYPE	DOOR LEAF	MATERIAL	FINISH	HARDWARE	LATCHING	NOTES
007A	2'-8"	6'-8"	SWING	PANEL	WOOD	PAINTED	TBD	PASSAGE	
008A	4'-8"	7'-0"	SWING	PANEL	WOOD	PAINTED	TBD	PASSAGE	
008B	4'-8"	7'-0"	SWING	PANEL	WOOD	PAINTED	TBD	PASSAGE	
008C	2'-8"	6'-8"	SWING	PANEL	WOOD	PAINTED	TBD	PASSAGE	
009A	2'-8"	6'-8"	SWING	PANEL	WOOD	PAINTED	TBD	PASSAGE	
009B	2'-4"	6'-8"	SWING	PANEL	WOOD	PAINTED	TBD	PASSAGE	
010A	2'-4"	6'-8"	SWING	PANEL	WOOD	PAINTED	TBD	PASSAGE	
011A	2'-8"	6'-8"	SWING	PANEL	WOOD	PAINTED	TBD	PASSAGE	
012A	2'-8"	6'-8"	SWING	PANEL	WOOD	PAINTED	TBD	PASSAGE	
012B	2'-4"	6'-8"	SWING	PANEL	WOOD	PAINTED	TBD	PASSAGE	
012C	2'-4"	6'-8"	SWING	PANEL	WOOD	PAINTED	TBD	PASSAGE	
103A	2'-4"	6'-8"	SWING	PANEL	WOOD	PAINTED	TBD	PASSAGE	
105B	2'-8"	8'-0"	SWING	PANEL	WOOD	PAINTED	TBD	PASSAGE	
105C	2'-8"	8'-0"	SWING	PANEL	WOOD	PAINTED	TBD	PASSAGE	
106A	3'-0"	6'-8"	SWING	PANEL	WOOD	PAINTED	TBD	PASSAGE	

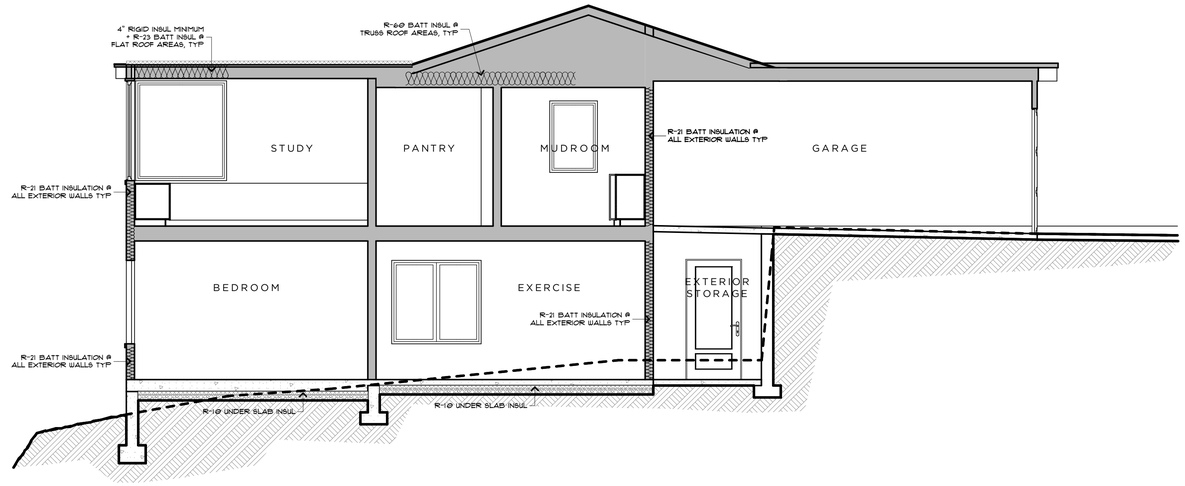

SECTION A-A

SCALE: 1/4" = 1'-0"

A

RIPPLE
DESIGN STUDIO
206.913.2333
4303 STONE WAY N
SEATTLE, WA 98103

9790
REGISTERED ARCHITECT
JAMES M DEARTH
STATE OF WASHINGTON

ALPAY RESIDENCE
5419 96TH AVE SE
MERCER ISLAND, WA
98040

A
5

BUILDING SECTIONS A-A + B-B

THIS DRAWING, AS AN INSTRUMENT OF SERVICE, IS + SHALL REMAIN THE SOLE PROPERTY OF RIPPLE DESIGN STUDIO + SHALL NOT BE REPRODUCED, PUBLISHED, OR USED IN ANY MANNER WITHOUT PROPER AUTHORIZATION.
COPYRIGHT © 2025 BY RIPPLE DESIGN STUDIO

RELEASE

PERMIT RESPONSE
9 DECEMBER 2025

CAR-2 PERMIT SUBMITTAL
23 DECEMBER 2025

PERMIT RESPONSE
7 JANUARY 2026

PERMIT RESPONSE
26 FEBRUARY 2026

A3.3

ALPAY
AUTHORED: 2/27/26

General Structural Notes

The Following Apply Unless Noted Otherwise on the Drawings

Criteria

1. ALL MATERIALS, WORKMANSHIP, DESIGN, AND CONSTRUCTION SHALL CONFORM TO THE DRAWINGS, SPECIFICATIONS, AND THE 2021 INTERNATIONAL BUILDING CODE.
2. DESIGN LOAD CRITERIA

FLOOR LIVE LOAD (PARKING)	40 PSF
FLOOR CONCENTRATED LOAD (PARKING)	3000 LBS
FLOOR LIVE LOAD (RESIDENTIAL)	40 PSF
FLOOR LIVE LOAD (RESIDENTIAL DECKS)	60 PSF
GUARDRAILS/BALCONY RAILS CONCENTRATED LOAD	200 LBS
SNOW	Pf=25 PSF
WIND	Iw=1.0, GCpi=0.18, 98 MPH (ULTIMATE), EXPOSURE "c", KZT=1.0
EARTHQUAKE	
ANALYSIS PROCEDURE:	EQUIVALENT LATERAL FORCE PROCEDURE
LATERAL SYSTEM:	LIGHT FRAMED SHEAR WALLS
BASE SHEAR (ALLOWABLE)	V=9.5 KIPS
SITE CRITERIA	SITE CLASS=D, Ss=1.44, Sds=0.96, S1=0.5, SD1=0.60, Cs=0.148 SDC D, Ie=1.0, R=6.5

SEE PLANS FOR ADDITIONAL LOADING CRITERIA

3. STRUCTURAL DRAWINGS SHALL BE USED IN CONJUNCTION WITH ARCHITECTURAL DRAWINGS FOR BIDDING AND CONSTRUCTION. CONTRACTOR SHALL VERIFY DIMENSIONS AND CONDITIONS FOR COMPATIBILITY AND SHALL NOTIFY ARCHITECT OF ANY DISCREPANCIES PRIOR TO CONSTRUCTION.
4. CONTRACTOR SHALL VERIFY ALL EXISTING DIMENSIONS, MEMBER SIZES, AND CONDITIONS PRIOR TO COMMENCING ANY WORK. ALL DIMENSIONS OF EXISTING CONSTRUCTION SHOWN ON THE DRAWINGS ARE INTENDED AS GUIDELINES ONLY AND MUST BE VERIFIED.
5. CONTRACTOR SHALL PROVIDE TEMPORARY BRACING FOR THE STRUCTURE AND STRUCTURAL COMPONENTS UNTIL ALL FINAL CONNECTIONS HAVE BEEN COMPLETED IN ACCORDANCE WITH THE PLANS.
6. CONTRACTOR SHALL BE RESPONSIBLE FOR ALL SAFETY PRECAUTIONS AND THE METHODS, TECHNIQUES, SEQUENCES OR PROCEDURES, REQUIRED TO PERFORM THE CONTRACTORS WORK. THE STRUCTURAL ENGINEER HAS NO OVERALL SUPERVISORY AUTHORITY OR ACTUAL AND/OR DIRECT RESPONSIBILITY FOR THE SPECIFIC WORKING CONDITIONS AT THE SITE AND/OR FOR ANY HAZARDS RESULTING FROM THE ACTIONS OF ANY TRADE CONTRACTOR. THE STRUCTURAL ENGINEER HAS NO DUTY TO INSPECT, SUPERVISE, NOTE, CORRECT, OR REPORT ANY HEALTH OR SAFETY DEFICIENCIES TO THE OWNER, CONTRACTORS, OR OTHER ENTITIES OR PERSONS AT THE PROJECT SITE.
7. CONTRACTOR-INITIATED CHANGES SHALL BE SUBMITTED IN WRITING TO THE ARCHITECT AND STRUCTURAL ENGINEER FOR APPROVAL PRIOR TO FABRICATION OR CONSTRUCTION. CHANGES SHOWN ON SHOP DRAWINGS ONLY WILL NOT SATISFY THIS REQUIREMENT.
8. DRAWINGS INDICATE GENERAL AND TYPICAL DETAILS OF CONSTRUCTION. WHERE CONDITIONS ARE NOT SPECIFICALLY INDICATED BUT ARE OF SIMILAR CHARACTER TO DETAILS SHOWN, SIMILAR DETAILS OF CONSTRUCTION SHALL BE USED, SUBJECT TO REVIEW AND APPROVAL BY THE ARCHITECT AND THE STRUCTURAL ENGINEER.
9. ALL STRUCTURAL SYSTEMS WHICH ARE TO BE COMPOSED OF COMPONENTS TO BE FIELD ERECTED SHALL BE SUPERVISED BY THE SUPPLIER DURING MANUFACTURING, DELIVERY, HANDLING, STORAGE AND ERECTION IN ACCORDANCE WITH INSTRUCTIONS PREPARED BY THE SUPPLIER.
10. SHOP DRAWINGS FOR THE FOLLOWING ITEMS SHALL BE SUBMITTED TO THE ARCHITECT AND STRUCTURAL ENGINEER FOR REVIEW PRIOR TO FABRICATION OF THESE ITEMS.
    CONNECTOR PLATE WOOD ROOF TRUSSES
    STRUCTURAL STEEL
    CONTRACTOR SHALL SUBMIT WALL ELEVATION DRAWINGS OF AT LEAST 1/8"=1'-0" SCALE INDICATING LOCATIONS OF CONNECTION EMBEDMENTS AND WALL OPENINGS FOR REVIEW PRIOR TO CONSTRUCTION. CONTRACTOR SHALL COORDINATE WITH REINFORCEMENT SHOP DRAWINGS.
    APPROVED SETS OF ALL SHOP DRAWINGS SHALL ALSO BE SUBMITTED TO THE BUILDING DEPARTMENT.
11. SHOP DRAWING REVIEW: DIMENSIONS AND QUANTITIES ARE NOT REVIEWED BY THE ENGINEER OF RECORD, THEREFORE MUST BE VERIFIED BY THE CONTRACTOR. CONTRACTOR SHALL REVIEW AND STAMP DRAWINGS PRIOR TO REVIEW BY ENGINEER OF RECORD. CONTRACTOR SHALL REVIEW DRAWINGS FOR CONFORMANCE WITH THE MEANS, METHODS, TECHNIQUES, SEQUENCES AND OPERATIONS OF CONSTRUCTION, AND ALL SAFETY PRECAUTIONS AND PROGRAMS INCIDENTAL THERETO. SUBMITTALS SHALL INCLUDE A REPRODUCIBLE AND ONE COPY; REPRODUCIBLE WILL BE MARKED AND RETURNED WITHIN TWO WEEKS OF RECEIPT WITH A NOTATION INDICATING THAT THE SUBMITTAL HAS BEEN FOUND TO BE IN GENERAL CONFORMANCE WITH THE DESIGN OF THE BUILDING. THE SUBMITTED ITEMS SHALL NOT BE INSTALLED UNTIL THEY HAVE BEEN APPROVED BY THE BUILDING OFFICIAL.
    SHOP DRAWING SUBMITTALS PROCESSED BY THE ENGINEER ARE NOT CHANGE ORDERS. THE PURPOSE OF SHOP DRAWING SUBMITTALS BY THE CONTRACTOR IS TO DEMONSTRATE TO THE ENGINEER THAT THE CONTRACTOR UNDERSTANDS THE DESIGN CONCEPT, BY INDICATING WHICH MATERIAL IS INTENDED TO BE FURNISHED AND INSTALLED AND BY DETAILING THE INTENDED FABRICATION AND INSTALLATION METHODS. IF DEVIATIONS, DISCREPANCIES, OR CONFLICTS BETWEEN SHOP DRAWING SUBMITTALS AND THE CONTRACT DOCUMENTS ARE DISCOVERED EITHER PRIOR TO OR AFTER SHOP DRAWING SUBMITTALS ARE PROCESSED BY THE ENGINEER, THE DESIGN DRAWINGS AND SPECIFICATIONS SHALL CONTROL AND SHALL BE FOLLOWED.

Quality Assurance

1. SPECIAL INSPECTION SHALL BE PROVIDED IN ACCORDANCE WITH THE PROJECT SPECIFICATIONS AND SECTIONS 110 AND 1704 OF THE INTERNATIONAL BUILDING CODE BY A QUALIFIED TESTING AGENCY DESIGNATED BY THE ARCHITECT, AND RETAINED BY THE BUILDING OWNER. THE ARCHITECT, STRUCTURAL ENGINEER, AND BUILDING DEPARTMENT SHALL BE FURNISHED WITH COPIES OF ALL INSPECTION AND TEST RESULTS. SPECIAL INSPECTION IS REQUIRED OF THE FOLLOWING TYPES OF CONSTRUCTION:

STRUCTURAL STEEL FABRICATION AND ERECTION	PER IBC 1705.2
PILE OR PIER FOUNDATIONS	PER IBC TABLE 1705.7 PER SOILS REPORT
EXPANSION BOLTS AND THREADED EXPANSION INSERTS	PER MANUFACTURER
EPOXY GROUTED INSTALLATIONS	PER MANUFACTURER

Geotechnical

1. FOUNDATION NOTES: SUBGRADE PREPARATION INCLUDING DRAINAGE, EXCAVATION, COMPACTION, AND FILLING REQUIREMENTS, SHALL CONFORM STRICTLY WITH RECOMMENDATIONS GIVEN IN THE SOILS REPORT OR AS DIRECTED BY THE SOILS ENGINEER. FOOTINGS SHALL BEAR ON SOLID UNDISTURBED EARTH AT LEAST 18" BELOW LOWEST ADJACENT FINISHED GRADE. FOOTING DEPTHS/ELEVATIONS SHOWN ONPLANS (OR IN DETAILS) ARE MINIMUM AND FOR GUIDANCE ONLY; THE ACTUAL ELEVATIONS OF FOOTINGS MUST BE ESTABLISHED BY THE CONTRACTOR IN THE FIELD WORKING WITH THE TESTING LAB AND SOILS ENGINEER. BACKFILL BEHIND ALL RETAINING WALLS WITH FREE DRAINING GRANULAR FILL AND PROVIDE FOR SUBSURFACE DRAINAGE AS NOTED IN THE SOILS REPORT.

ALLOWABLE SOIL PRESSURE	2000 PSF
LATERAL EARTH PRESSURE (UNRESTRAINED)	40 PCF
PASSIVE EARTH PRESSURE (AT H PILES)	350 PCF
3" PILE CAPACITY (COMPRESSION)	12 Kips
DRIVEN H PILE	20 Kips

SOILS REPORT REFERENCE: Geotech Consultants, Inc, Project:JN 25288, Date: 10/24/2025

2. AUGERCAST PILING INSPECTION BY THE SOILS ENGINEER SHALL BE PERFORMED DURING PLACEMENT. MAXIMUM AUGERCAST PILE ECCENTRICITY SHALL BE 3" LATERALLY.PILE LENGTH INDICATED ON DRAWINGS IS ESTIMATED. ACTUAL LENGTH SHALL BE DETERMINED IN FIELD BY SOILS ENGINEER. THE CONTRACTOR SHALL DETERMINE THE LOCATION OF ALL ADJACENT UNDERGROUND UTILITIES PRIOR TO DRILLING PILES.
3. 3" PIN PILES SHALL BE DRIVEN TO REFUSAL AS DEFINED BY THE GEOTECHNICAL REPORT. LOAD TESTING SHALL BE CONDUCTED UNDER THE SUPERVISION OF THE GEOTECHNICAL ENGINEER USING THE ASTM D 1143-81 QUICK TEST METHOD. PERFORM A 200% LOAD TEST ON 3% OF PILES (1 MINIMUM, 5 MAXIMUM).

Renovation

1. DEMOLITION: CONTRACTOR SHALL VERIFY ALL EXISTING CONDITIONS BEFORE COMMENCING ANY DEMOLITION. SHORING SHALL BE INSTALLED TO SUPPORT EXISTING CONSTRUCTION AS REQUIRED AND IN A MANNER SUITABLE TO THE WORK SEQUENCES. DEMOLITION DEBRIS SHALL NOT BE ALLOWED TO DAMAGE OR OVERLOAD THE EXISTING STRUCTURE. LIMIT CONSTRUCTION LOADING (INCLUDING DEMOLITION DEBRIS) ON EXISTING FLOOR SYSTEMS TO 40 PSF.
2. CONTRACTOR SHALL CHECK FOR DRYROT AT ALL AREAS OF NEW WORK. ALL ROT SHALL BE REMOVED AND DAMAGED MEMBERS SHALL BE REPLACED OR REPAIRED AS DIRECTED BY THE STRUCTURAL ENGINEER OR ARCHITECT.

Concrete

1. CONCRETE SHALL BE MIXED, PROPORTIONED, CONVEYED AND PLACED IN ACCORDANCE WITH IBC SECTION 1905, 1906, AND ACI 301. STRENGTHS AT 28 DAYS AND MIX CRITERIA SHALL BE AS FOLLOWS:

TYPE OF CONSTRUCTION	28 DAY STRENGTH (f'c)
ALL STRUCTURAL CONCRETE	3,000 PSI

NOTE: STRUCTURAL DESIGN OF FOUNDATION IS BASED ON A f'c=2,500 PSI, PER IBC 1705.3.2.3, SPECIAL INSPECTION IS NOT REQUIRED

2. ALL CONCRETE WITH SURFACES EXPOSED TO WEATHER OR STANDING WATER SHALL BE AIR-ENTRAINED WITH AN AIR-ENTRAINING AGENT CONFORMING TO ASTM C260, C494, AND C618. TOTAL AIR CONTENT FOR FROST-RESISTANT CONCRETE SHALL BE IN ACCORDANCE WITH TABLE ACI 318 TABLE 19.3.1.1 MODERATE EXPOSURE.
3. REINFORCING STEEL SHALL CONFORM TO ASTM A615 (INCLUDING SUPPLEMENT S1), GRADE 60, fy=60,000 PSI. EXCEPTIONS: ANY BARS SPECIFICALLY SO NOTED ON THE DRAWINGS SHALL BE GRADE 40, fy=40,000 PSI. WELDED WIRE FABRIC SHALL CONFORM TO ASTM A-185.
4. DETAILING OF REINFORCING STEEL (INCLUDING HOOKS AND BENDS) SHALL BE IN ACCORDANCE WITH ACI 315-99 AND 318-14. LAP ALL REINFORCEMENTS IN ACCORDANCE WITH "THE REINFORCING SPLICE AND DEVELOPMENT LENGTH SCHEDULE." PROVIDE CORNER BARS AT ALL WALL AND FOOTING INTERSECTIONS. LAP ADJACENT MATS OF WELDED WIRE FABRIC A MINIMUM OF 8" AT SIDES AND ENDS.
   NO BARS PARTIALLY EMBEDDED IN HARDENED CONCRETE SHALL BE FIELD BENT UNLESS SPECIFICALLY SO DETAILED OR APPROVED BY THE STRUCTURAL ENGINEER.
5. CONCRETE PROTECTION (COVER) FOR REINFORCING STEEL SHALL BE AS FOLLOWS:

FOOTINGS AND OTHER UNFORMED SURFACES CAST AGAINST AND PERMANENTLY EXPOSEDTO EARTH	3"
FORMED SURFACES EXPOSED TO EARTH OR WEATHER (#5 BARS OR SMALLER)	1-1/2"
SLABS AND WALLS (INT. FACE)	GREATER OF BAR DIAMETER PLUS 1/8" OR 3/4"

6. NON-SHRINK GROUT SHALL BE FURNISHED BY AN APPROVED MANUFACTURER AND SHALL BE MIXED AND PLACED IN STRICT ACCORDANCE WITH THE MANUFACTURER'S PUBLISHED RECOMMENDATIONS. GROUT STRENGTH SHALL BE AT LEAST EQUAL TO THE MATERIAL ON WHICH IT IS PLACED (3000 PSI MINIMUM).

Anchorage

1. WHERE EXPANSION BOLTS ARE USED, EITHER OF THE FOLLOWING PRODUCTS ARE ACCEPTABLE.
   1.1. EXPANSION BOLTS INTO CONCRETE AND CONCRETE MASONRY UNITS SHALL BE "KWIK BOLT TZ" AS MANUFACTURED BY THE HILTI CORP., INSTALLED IN STRICT ACCORDANCE WITH ICC-ES REPORT NO. ESR-1917, INCLUDING MINIMUM EMBEDMENT REQUIREMENTS. BOLTS INTO CONCRETE MASONRY OR BRICK MASONRY UNITS SHALL BE INTO FULLY GROUTED CELLS. SUBSTITUTES PROPOSED BY CONTRACTOR SHALL BE SUBMITTED FOR REVIEW WITH ICC REPORTS INDICATING EQUIVALENT OR GREATER LOAD CAPACITIES. SPECIAL INSPECTION IS REQUIRED FOR ALL EXPANSION BOLT INSTALLATION.
   1.2. EXPANSION BOLTS INTO CONCRETE AND CONCRETE MASONRY UNITS SHALL BE STRONG-BOLT 2 ANCHORS AS MANUFACTURED BY THE SIMPSON STRONG TIE COMPANY AND INSTALLED IN STRICT CONFORMANCE TO ICC-ES REPORT NUMBER ESR-3037, INCLUDING MINIMUM EMBEDMENT REQUIREMENTS. BOLTS INTO CONCRETE MASONRY OR BRICK MASONRY UNITS SHALL BE INTO FULLY GROUTED CELLS. SPECIAL INSPECTION IS REQUIRED FOR ALL EXPANSION BOLT INSTALLATION.
2. WHERE EPOXY-GROUTED ITEMS ARE USED, EITHER OF THE FOLLOWING PRODUCTS ARE ACCEPTALBE.
   2.1. EPOXY-GROUTED ITEMS (THREADED RODS OR REINFORCING BAR) SPECIFIED ON THE DRAWINGS SHALL BE INSTALLED USING "HIT RE 500-V3" AS MANUFACTURED BY HILTI CORP. INSTALL IN STRICT ACCORDANCE WITH ICC-ES REPORT NO. ESR-2322. SPECIAL INSPECTION OF INSTALLATION IS REQUIRED. RODS SHALL BE ASTM A-36 UNLESS OTHERWISE NOTED.
   2.2. EPOXY-GROUTED ITEMS (THREADED RODS OR REINFORCING BAR) SPECIFIED ON THE DRAWINGS SHALL BE INSTALLED USING "SET-3G" HIGH STRENGTH EPOXY AS MANUFACTURED BY THE SIMPSON STRONG TIE COMPANY. INSTALL IN STRICT ACCORDANCE WITH ICC-ES REPORT NO. ESR-4057. SPECIAL INSPECTION OF INSTALLATION IS REQUIRED. RODS SHALL BE ASTM A-36 UNLESS OTHERWISE NOTED.

Steel

1. STRUCTURAL STEEL DESIGN, FABRICATION, AND ERECTION SHALL BE BASED ON:
   A. EITHER AISC 360 AND SECTION 2205.2 OF THE INTERNATIONAL BUILDING CODE.
   B. JULY 7, 2016 AISC CODE OF STANDARD PRACTICE FOR STEEL BUILDINGS, AMENDED AS FOLLOWS.
      i) AS NOTED IN THE CONTRACT DOCUMENTS.
      ii) BY THE DELETION OF PARAGRAPH 4.4.1.
      iii) REVISE REFERENCE FROM "STRUCTURAL DESIGN DRAWINGS" TO "CONTRACT DOCUMENTS" IN PARAGRAPH 3.1.
2. SPECIFICATION FOR STRUCTURAL JOINTS USING ASTM A325 OR A490 BOLTS.
   STRUCTURAL STEEL SHALL CONFORM TO THE FOLLOWING REQUIREMENTS:

TYPE OF MEMBER	ASTM SPECIFICATION	Fy
WIDE FLANGE SHAPES	A992	50 KSI
OTHER SHAPES, PLATES, AND RODS	A36	36 KSI
OTHER SHAPES AND PLATES (NOTED GRADE 50 ON PLANS)	A572 (GRADE 50)	50 KSI
PIPE COLUMNS	A53 (E OR S, GR.B)	35 KSI
STRUCTURAL TUBING	A500 (GRADE B)	
SQUARE OR RECTANGULAR		46 KSI
ROUND		42 KSI
CONNECTION BOLTS (3/4" ROUND, UNLESS SHOWN OTHERWISE)	A325-N	

3. ARCHITECTURALLY EXPOSED STRUCTURAL STEEL SHALL CONFORM TO SECTION 10 OF THE AISC CODE OF STANDARD PRACTICE FOR STEEL BUILDINGS AND BRIDGES.
4. ALL A-325N CONNECTION BOLTS NEED ONLY BE TIGHTENED TO A SNUG TIGHT CONDITION, DEFINED AS THE TIGHTNESS THAT EXISTS WHEN ALL PLIES IN A JOINT ARE IN FIRM CONTACT. THIS MAY BE ATTAINED BY A FEW IMPACTS OF AN IMPACT WRENCH OR THE FULL EFFORT OF AN IRONWORKER USING AN ORDINARY SPUD WRENCH.
5. ALL ANCHORS EMBEDDED IN MASONRY OR CONCRETE SHALL BE A307 HEADED BOLTS OR A36 THREADED ROD WITH AN ASTM 563 HEAVY HEX NUT TACK WELDED ON THE EMBEDDED END.
6. ALL WELDING SHALL BE IN CONFORMANCE WITH A.I.S.C. AND A.W.S. STANDARDS AND SHALL BE PERFORMED BY W.A.B.O. CERTIFIED WELDERS USING E70 XX ELECTRODES. ONLY PREQUALIFIED WELDS (AS DEFINED BY A.W.S.) SHALL BE USED. ALL COMPLETE JOINT PENETRATION GROOVE WELDS SHALL BE MADE WITH A FILLER MATERIAL THAT HAS A MINIMUM CVN TOUGHNESS OF 20 FT-LBS AT -20 DEGREES F AND 40 FT-LBS AT 70 DEGREES F, AS DETERMINED BY AWS CLASSIFICATION OR MANUFACTURER CERTIFICATION.

Wood

1. FRAMING LUMBER SHALL BE KILN DRIED OR MC-19, AND GRADED AND MARKED IN CONFORMANCE WITH W.C.L.B. STANDARD GRADING RULES FOR WEST COAST LUMBER NO.17. FURNISH TO THE FOLLOWING MINIMUM STANDARDS:

JOISTS AND BEAMS:	(2X & 3X MEMBERS)	HEM-FIR NO. 2 MINIMUM BASE VALUE, Fb=850 PSI
	(4X MEMBERS)	DOUGLAS FIR-LARCH NO. 2 MINIMUM BASE VALUE, Fb=900 PSI
BEAMS:	(INCL. 6X AND LARGER)	DOUGLAS FIR-LARCH NO. 1 MINIMUM BASE VALUE, Fb=1350 PSI
POSTS:	(4X MEMBERS)	DOUGLAS FIR-LARCH NO. 2 MINIMUM BASE VALUE, Fc=1350 PSI
	(6X AND LARGER)	DOUGLAS FIR-LARCH NO. 1 MINIMUM BASE VALUE, Fc=1000 PSI
STUDS, PLATES & MISC. FRAMING:		DOUGLAS-FIR-LARCH OR HEM-FIR NO. 2

2. GLUED LAMINATED MEMBERS SHALL BE FABRICATED IN CONFORMANCE WITH ASTM AND AITC STANDARDS. EACH MEMBER SHALL BEAR AN A.I.T.C. IDENTIFICATION MARK AND SHALL BE ACCOMPANIED BY AN A.I.T.C. CERTIFICATE OF CONFORMANCE. ALL SIMPLE SPAN BEAMS SHALL BE DOUGLAS FIR COMBINATION 24F-V4, Fb=2,400 PSI, Fv=265 PSI. ALL CANTILEVERED BEAMS SHALL BE DOUGLAS FIR COMBINATION 24F-V8, Fb=2400 PSI, Fv=265 PSI. CAMBER ALL SIMPLE SPAN GLULAM BEAMS TO 3,000' RADIUS, UNLESS SHOWN OTHERWISE ON THE PLANS.
3. MANUFACTURED LUMBER, PSL, LVL, AND LSL, SHALL BE MANUFACTURED UNDER A PROCESS APPROVED BY THE NATIONAL RESEARCH BOARD. EACH PIECE SHALL BEAR A STAMP OR STAMPS NOTING THE NAME AND PLANT NUMBER OF THE MANUFACTURER, THE GRADE, THE NATIONAL RESEARCH BOARD NUMBER, AND THE QUALITY CONTROL AGENCY. ALL PSL, LVL, AND LSL LUMBER SHALL BE MANUFACTURED IN ACCORDANCE WITH ICC-ES REPORT ESR-1387 USING DOUGLAS FIR VENEER GLUED WITH A WATERPROOF ADHESIVE MEETING THE REQUIREMENTS OF ASTM D2559 WITH ALL GRAIN PARALLEL WITH THE LENGTH OF THE MEMBER. THE MEMBERS SHALL HAVE THE FOLLOWING MINIMUM PROPERTIES:

PSL (2.0E)	Fb=2900 PSI, E=2000 KSI, Fv=290 PSI
LVL (1.9E)	Fb=2600 PSI ,E=1900 KSI, Fv=285 PSI
LSL (1.55E)	Fb=2325 PSI ,E=1550 KSI, Fv=310 PSI

   DESIGN SHOWN ON PLANS IS BASED ON LUMBER MANUFACTURED BY THE WEYERHAEUSER CORPORATION. ALTERNATE MANUFACTURERS MAY BE USED SUBJECT TO REVIEW AND APPROVAL BY THE ARCHITECT AND STRUCTURAL ENGINEER, ALTERNATE JOIST HANGERS AND OTHER HARDWARE MAY BE SUBSTITUTED FOR ITEMS SHOWN PROVIDED THEY HAVE ICC APPROVAL FOR EQUAL OR GREATER LOAD CAPACITIES. ALL JOIST HANGERS AND OTHER HARDWARE SHALL BE COMPATIBLE IN SIZE WITH MEMBERS PROVIDED.
   MANUFACTURED LUMBER PRODUCTS SHALL BE INSTALLED WITH A MOISTURE CONTENT OF 12% OR LESS. THE CONTRACTOR SHALL MAKE PROVISIONS DURING CONSTRUCTION TO PREVENT THE MOISTURE CONTENT OF INSTALLED BEAMS FROM EXCEEDING 12%. EXCESSIVE DEFLECTIONS MAY OCCUR IF MOISTURE CONTENT EXCEEDS THIS VALUE.
4. PREFABRICATED PLYWOOD WEB JOIST DESIGN SHOWN ON PLANS IS BASED ON JOISTS MANUFACTURED BY THE TRUS-JOIST CORPORATION. ALTERNATE PLYWOOD WEB JOIST MANUFACTURERS MAY BE USED SUBJECT TO REVIEW AND APPROVAL BY THE ARCHITECT AND STRUCTURAL ENGINEER. ALTERNATE JOIST HANGERS AND OTHER HARDWARE MAY BE SUBSTITUTED FOR ITEMS SHOWN PROVIDED THEY HAVE I.C.B.O. APPROVAL FOR EQUAL OR GREATER LOAD CAPACITIES. ALL JOIST HANGERS AND OTHER HARDWARE SHALL BE COMPATIBLE IN SIZE WITH PLYWOOD WEB JOIST PROVIDED.

Wood (Continued)

5. PREFABRICATED CONNECTOR PLATE WOOD ROOF TRUSSES SHALL BE DESIGNED BY THE MANUFACTURER IN ACCORDANCE WITH THE "NATIONAL DESIGN STANDARD FOR METAL PLATE-CONNECTED WOOD TRUSS CONSTRUCTION, ANSI/TPI 1" BY THE TRUSS PLATE INSTITUTE FOR THE SPANS AND CONDITIONS SHOWN ON THE PLANS. LOADING SHALL BE AS FOLLOWS:

TOP CHORD LIVE LOAD	25 PSF
TOP CHORD DEAD LOAD	10 PSF
BOTTOM CHORD DEAD LOAD	5 PSF
TOTAL LOAD	40 PSF
WIND UPLIFT (TOP CHORD)	5 PSF
BOTTOM CHORD LIVE LOAD	10 PSF

   (BOTTOM CHORD LIVE LOAD DOES NOT ACT CONCURENTLY WITH THE ROOF LIVE LOAD)
   WOOD TRUSSES SHALL UTILIZE APPROVED CONNECTOR PLATES (GANGNAIL OR EQUAL). SUBMIT SHOP DRAWINGS AND DESIGN CALCULATIONS TO THE ARCHITECT AND STRUCTURAL ENGINEER FOR REVIEW PRIOR TO FABRICATION. SUBMITTED DOCUMENTS SHALL BE SIGNED AND STAMPED BY A STRUCTURAL ENGINEER REGISTERED IN THE STATE OF WASHINGTON. PROVIDE FOR SHAPES, BEARING POINTS, INTERSECTIONS, HIPS, VALLEYS, ETC., SHOWN ON THE DRAWINGS. THE EXACT COMPOSITION OF SPECIAL HIP, VALLEY, AND INTERSECTION AREAS (USE OF GIRDER TRUSSES, JACK TRUSSES, STEP-DOWN TRUSSES, ETC.) SHALL BE DETERMINED BY THE MANUFACTURER UNLESS SPECIFICALLY INDICATED ON THE PLANS. PROVIDE ALL TRUSS TO TRUSS AND TRUSS TO GIRDER TRUSS CONNECTION DETAILS AND REQUIRED CONNECTION MATERIALS. PROVIDE FOR ALL TEMPORARY AND PERMANENT TRUSS BRACING AND BRIDGING.
6. PLYWOOD SHEATHING SHALL BE GRADE C-D, EXTERIOR GLUE OR STRUCTURAL II, EXTERIOR GLUE IN CONFORMANCE WITH DOC PS 1. ORIENTED STRAND BOARD OF EQUIVALENT THICKNESS, EXPOSURE RATING AND PANEL INDEX MAY BE USED IN LIEU OF PLYWOOD.
   A. ROOF SHEATHING SHALL BE 5/8" (NOMINAL) WITH SPAN RATING 40/20.
   B. FLOOR SHEATHING SHALL BE 3/4" (NOMINAL) WITH SPAN RATING 48/24.
   C. WALL SHEATHING SHALL BE 1/2" (NOMINAL) WITH SPAN RATING 24/0.
   D. REFER TO WOOD FRAMING NOTES BELOW FOR TYPICAL NAILING REQUIREMENTS.
7. ALL WOOD IN DIRECT CONTACT WITH CONCRETE OR MASONRY SHALL BE PRESSURE-TREATED WITH AN APPROVED PRESERVATIVE OR (2) LAYERS OF ASPHALT IMPREGNATED BUILDING PAPER SHALL BE PROVIDED BETWEEN UNTREATED WOOD AND CONCRETE OR MASONRY.
8. PRESSURE TREATED WOOD SHALL BE TREATED PER AWPA STANDARD. PRESSURE TREATED WOOD FOR ABOVE GROUND USE SHALL BE TREATED TO A RETENTION OF 0.25 PCF. WOOD IN CONTINUOUS CONTACT WITH FRESH WATER OR SOIL SHALL BE TREATED TO A RETENTION OF 0.40 PCF. WOOD FOR USE IN PERMANENT FOUNDATIONS SHALL BE TREATED TO A RETENTION OF 0.60 PCF. SODIUM BORATE (SBX) TREATED WOOD SHALL NOT BE USED WHERE EXPOSED TO WEATHER. FASTENERS AND TIMBER CONNECTORS IN DIRECT CONTACT WITH ACQ-A, CBA-A, CA-B, OR SBX TREATED WOOD SHALL BE G185 OR A185 HOT DIPPED OR CONTINUOUS HOT-GALVANIZED PER ASTM A653. FASTENERS AND TIMBER CONNECTORS IN DIRECT CONTACT WITH ACZA TREATED WOOD SHALL BE TYPE 304 OR 316 STAINLESS STEEL.
9. TIMBER CONNECTORS CALLED OUT BY LETTERS AND NUMBERS SHALL BE "STRONG-TIE" BY SIMPSON COMPANY, AS SPECIFIED IN THEIR CATALOG NUMBER C-C-2024. EQUIVALENT DEVICES BY OTHER MANUFACTURERS MAY BE SUBSTITUTED, PROVIDED THEY HAVE ICC-ES APPROVAL FOR EQUAL OR GREATER LOAD CAPACITIES. PROVIDE NUMBER AND SIZE OF FASTENERS AS SPECIFIED BY MANUFACTURER. CONNECTORS SHALL BE INSTALLED IN ACCORDANCE WITH THE MANUFACTURER'S RECOMMENDATIONS.
   ALL 2X JOISTS SHALL BE CONNECTED TO FLUSH BEAMS WITH "LUS" SERIES JOIST HANGERS. ALL TJI JOISTS SHALL BE CONNECTED TO FLUSH BEAMS WITH "IUS" SERIES JOIST HANGERS. ALL DOUBLE-JOIST BEAMS SHALL BE CONNECTED TO FLUSH BEAMS WITH "MIT" SERIES JOIST HANGERS.
   WHERE CONNECTOR STRAPS CONNECT TWO MEMBERS, PLACE ONE-HALF OF THE NAILS OR BOLTS IN EACH MEMBER.
   ALL SHIMS SHALL BE SEASONED AND DRIED AND THE SAME GRADE (MINIMUM) AS MEMBERS CONNECTED.
10. WOOD FASTENERS
    A. NAIL SIZES SPECIFIED ON DRAWINGS ARE BASED ON THE FOLLOWING SPECIFICATIONS:

SIZE	LENGTH	DIAMETER
6d	2"	0.113"
8d	2-1/2"	0.131"
10d	3"	0.148"
12d	3-1/4"	0.148"
16d BOX	3-1/2"	0.135"

    IF CONTRACTOR PROPOSES THE USE OF ALTERNATE NAILS, THEY SHALL SUBMIT NAIL SPECIFICATIONS TO THE STRUCTURAL ENGINEER (PRIOR TO CONSTRUCTION) FOR REVIEW AND APPROVAL.
    NAILS - PLYWOOD (APA RATED SHEATHING) FASTENERS TO FRAMING SHALL BE DRIVEN FLUSH TO FACE OF SHEATHING WITH NO COUNTERSINKING PERMITTED.
    B. ALL BOLTS IN WOOD MEMBERS SHALL CONFORM TO ASTM A307. PROVIDE WASHERS UNDER THE HEADS AND NUTS OF ALL BOLTS AND LAG BOLTS BEARING ON WOOD. INSTALLATION OF LAG BOLTS SHALL CONFORM TO THE NATIONAL DESIGN SPECIFICATION FOR WOOD CONSTRUCTION (2021 EDITION) WITH A LEAD BORE HOLE OF 60 TO 70 PERCENT OF THE SHANK DIAMETER. LEAD HOLES ARE NOT REQUIRED FOR 3/8" AND SMALLER LAG SCREWS.
11. WOOD FRAMING NOTES--THE FOLLOWING APPLY AT AREAS OF NEW CONSTRUCTION UNLESS OTHERWISE SHOWN ON THE PLANS:
    A. ALL WOOD FRAMING DETAILS NOT SHOWN OTHERWISE SHALL BE CONSTRUCTED TO THE MINIMUM STANDARDS OF THE INTERNATIONAL BUILDING CODE. MINIMUM NAILING, UNLESS OTHERWISE NOTED, SHALL CONFORM TO TABLE 2304.10.2. COORDINATE THE SIZE AND LOCATION OF ALL OPENINGS WITH MECHANICAL AND ARCHITECTURAL DRAWINGS.
    B. WALL FRAMING: REFER ARCHITECTURAL DRAWINGS FOR THE SIZE OF ALL WALLS. ALL STUDS SHALL BE SPACED AT 16" O.C. UNO. TWO STUDS MINIMUM SHALL BE PROVIDED AT THE END OF ALL WALLS AND AT EACH SIDE OF ALL OPENINGS, AND AT BEAM OR HEADER BEARING LOCATIONS. TWO 2x8 HEADERS SHALL BE PROVIDED OVER ALL OPENINGS NOT OTHERWISE NOTED. SOLID BLOCKING FOR WOOD COLUMNS SHALL BE PROVIDED THROUGH FLOORS TO SUPPORTS BELOW. PROVIDE CONTINUOUS SOLID BLOCKING AT MID-HEIGHT OF ALL STUD WALLS OVER 10'-0" IN HEIGHT.
    ALL WALLS SHALL HAVE A SINGLE BOTTOM PLATE AND A DOUBLE TOP PLATE. END NAIL TOP PLATE TO EACH STUD WITH TWO 16d NAILS, AND TOENAIL OR END NAIL EACH STUD TO BOTTOM PLATE WITH TWO 16d NAILS. FACE NAIL DOUBLE TOP PLATE WITH 16d @ 12" O.C. AND LAP MINIMUM 4'-0" AT JOINTS AND PROVIDE EIGHT 16d NAILS @ 4" O.C. EACH SIDE JOINT.
    ALL STUD WALLS SHALL HAVE THEIR LOWER WOOD PLATES ATTACHED TO WOOD FRAMING BELOW WITH TWO ROWS OF 16d NAILS @ 12" ON-CENTER, OR ATTACHED TO CONCRETE BELOW WITH 5/8" DIAMETER ANCHOR BOLTS @ 4'-0" ON-CENTER EMBEDDED 7" MINIMUM, UNLESS INDICATED OTHERWISE. INDIVIDUAL MEMBERS OF BUILT-UP POSTS SHALL BE NAILED TO EACH OTHER WITH TWO ROWS OF 16d @12" ON-CENTER. UNLESS OTHERWISE NOTED, GYPSUM WALLBOARD SHALL BE FASTENED TO THE INTERIOR SURFACE OF ALL STUDS AND PLATES WITH NO. 6 X 1-1/4" TYPE S OR W SCREWS @ 8" ON-CENTER. UNLESS INDICATED OTHERWISE, 1/2" (NOMINAL) APA RATED SHEATHING (SPAN RATING 24/0) SHALL BE NAILED TO ALL EXTERIOR SURFACES WITH 8d NAILS @ 6" ON-CENTER AT PANEL EDGES AND TOP AND BOTTOM PLATES (BLOCK UN-SUPPORTED EDGES) AND TO ALL INTERMEDIATE STUDS AND BLOCKING WITH 8d NAILS @ 12" ON-CENTER ALLOW 1/8" SPACING AT ALL PANEL EDGES AND PANEL ENDS.
    C. FLOOR AND ROOF FRAMING: PROVIDE DOUBLE JOISTS UNDER ALL PARALLEL PARTITIONS THAT EXTEND OVER MORE THAN HALF THE JOIST LENGTH AND AROUND ALL OPENINGS IN FLOORS OR ROOFS UNLESS OTHERWISE NOTED. PROVIDE SOLID BLOCKING AT ALL BEARING POINTS. TOENAIL JOISTS TO SUPPORTS WITH TWO 16d NAILS. ATTACH TIMBER JOISTS TO FLUSH HEADERS OR BEAMS WITH SIMPSON METAL JOIST HANGERS IN ACCORDANCE WITH NOTES ABOVE. NAIL ALL MULTI-JOIST BEAMS TOGETHER WITH TWO ROWS 16d @ 12" ON-CENTER.
    UNLESS OTHERWISE NOTED ON THE PLANS, PLYWOOD ROOF AND FLOOR SHEATHING SHALL BE LAID UP WITH GRAIN PERPENDICULAR TO SUPPORTS AND NAILED AT 6" ON-CENTER WITH 8d NAILS TO FRAMED PANEL EDGES, STRUTS AND OVER STUD WALLS AS SHOWN ON PLANS AND @ 12" ON-CENTER TO INTERMEDIATE SUPPORTS. PROVIDE APPROVED PLYWOOD EDGE CLIPS CENTERED BETWEEN JOISTS/TRUSSES AT UNBLOCKED ROOF SHEATHING EDGES. ALL FLOOR SHEATHING EDGES SHALL HAVE APPROVED T&G JOINTS OR SHALL BE SUPPORTED WITH SOLID BLOCKING. ALLOW 1/8" SPACING AT ALL PANEL EDGES AND ENDS OF FLOOR AND ROOF SHEATHING. TOENAIL BLOCKING TO SUPPORTS WITH 16d @ 12" ON-CENTER UNLESS OTHERWISE NOTED.

buker ENGINEERING LLC
4303 Stone Way N
Seattle, WA 98103
206.258.6333

DANIEL R. BUKER · STATE OF WASHINGTON · 44090 · STRUCTURAL ENGINEER · PROFESSIONAL ENGINEER

Alpay Residence
5419 96th Ave SE
Mercer Island, WA 98040

No.	Date	Issue
	11/10/25	Permit
1	2/26/26	Corrections

Sheet Contents: General Structural Notes

Sheet No.: S1.0

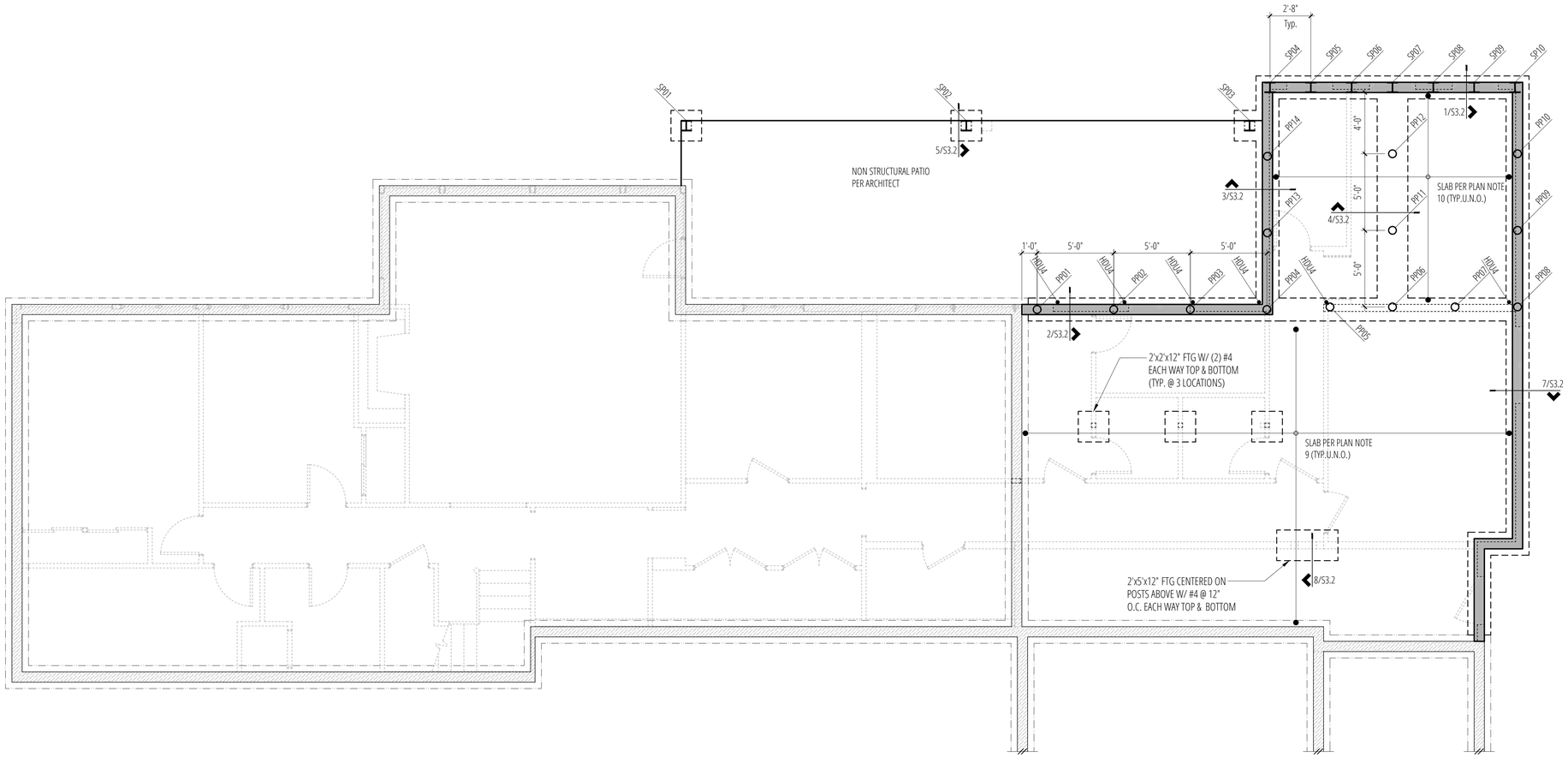

Foundation Plan

SCALE: ¼"=1'-0"

PLAN NOTES

1. REFER TO GENERAL STRUCTURAL NOTES FOR ADDITIONAL REQUIREMENTS (S1.1).
2. REFER TO ARCHITECTURAL DRAWINGS FOR ALL DIMENSIONS UNLESS SPECIFICALLY NOTED ON STRUCTURAL PLANS.
3. ALL NEW FOOTINGS NOT SUPPORTED BY PILES SHALL BEAR ON FIRM, NATIVE SOIL.
4. PROVIDE DRAINAGE BEHIND ALL FOUNDATION WALLS.
5. REINFORCE FOOTING AND WALL CORNERS AND INTERSECTIONS PER 11/S3.1.
6. "HDUx" REFERS TO HOLDOWNS PER 9/S3.1.
7. REFER 4/S3.1 WHERE PIPES PENETRATE FOUNDATION.
8. CONTRACTOR TO VERIFY TOP OF FOOTING ELEVATION w/ ARCHITECTURAL PLANS.
9. 4" CONCRETE SLAB ON GRADE REINFORCED WITH #3 @ 12" OC EACH WAY, CENTERED IN SLAB. PROVIDE A BASE OF 4" COMPACTED, CLEAN ¾" MINUS GRAVEL COVERED WITH 6 MIL. VAPOR BARRIER. PROVIDE JOINTS PER 7/S3.1.
10. 8" CONCRETE SLAB ON GRADE REINFORCED WITH #4 @ 6" OC EACH WAY, TOP & BOTTOM. FILL ANY VOID BETWEEN EXISTING GRADE AND BOTTOM OF SLAB WITH GEOFOAM. PROVIDE A BASE OF 4" COMPACTED, CLEAN ¾" MINUS GRAVEL COVERED WITH 6 MIL. VAPOR BARRIER. FLOOR SHEATHING SHALL BE ¾" T&G PLYWOOD SHEATHING WITH 48/24 SPAN.

PILE SCHEDULE

PLAN ID	SHAPE	MINIMUM EMBEDMENT
PP1 - PP14	3" ø STD PIPE	SEE NOTE 1
SP1 - PP10	W8x31	17'-0"

1. PIPE PILES SHALL BE DRIVEN TO REFUSAL & INSPECTED PER GENERAL NOTES
2. PILES SHALL BE CAPPED w/ MIN. ½ STL. PL & EMBED 3" MIN - 6" MAX IN CONCRETE FOUNDATIONS
3. EXTENT OF PIPE PILE SUPPORT IS APPROXIMATE & SHALL BE VERIFIED BY GEOTECHNICAL ENGINEER IN FIELD. IF ADDITIONAL/LESS PILES ARE REQ'D, COORDINATE REVISIONS w/ ENGINEER OF RECORD.

LEGEND

- (N) CONCRETE WALL ABOVE THIS LEVEL
- (E) CONCRETE WALL ABOVE THIS LEVEL
- (N) CONCRETE FOOTING
- (E) CONCRETE FOOTING
- STRUCTURAL WOOD WALL or POST BELOW THIS LEVEL
- (E) STRUCTURAL WOOD WALL OR POST BELOW THIS LEVEL
- STRUCTURAL WOOD WALL or POST ABOVE THIS LEVEL
- (E) SPAN DIRECTION
- SPAN DIRECTION
- EXTENT OF SPAN
- JOIST or BEAM
- (E) JOIST OR BEAM
- HD — HOLDOWN

buker ENGINEERING LLC
4303 Stone Way N
Seattle, WA 98103
206.258.6333

DANIEL R. BUKER
STATE OF WASHINGTON
44090
STRUCTURAL ENGINEER
PROFESSIONAL ENGINEER

Alpay Residence

5419 96th Ave SE
Mercer Island, WA 98040

No.	Date	Issue
	11/10/25	Permit

Sheet Contents

FOUNDATION PLAN

Sheet No.

S2.0

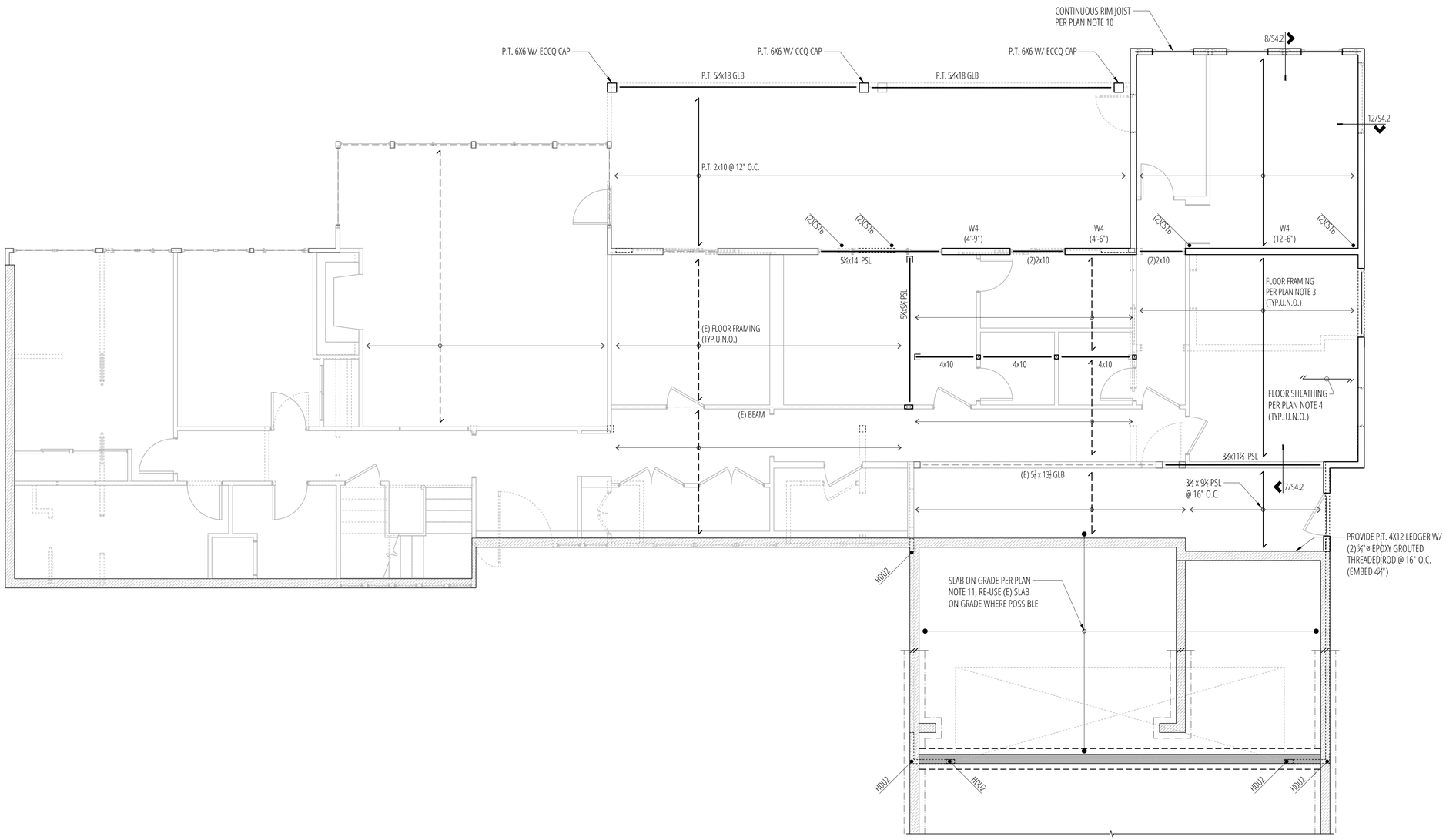

Main Floor Framing Plan

SCALE: ¼"=1'-0"

PLAN NOTES

1. REFER TO GENERAL STRUCTURAL NOTES FOR ADDITIONAL REQUIREMENTS (S1.1)
2. REFER TO ARCHITECTURAL DRAWINGS FOR ALL DIMENSIONS UNLESS SPECIFICALLY NOTED ON STRUCTURAL PLANS.
3. NEW FLOOR FRAMING WHERE INDICATED TO BE 11 ⅞" TJI 210 @ 16" O.C. (U.N.O.).
4. NEW FLOOR SHEATHING SHALL BE ¾" T&G PLYWOOD SHEATHING WITH 48/24 SPAN RATING. NAIL FRAMED PANEL EDGES w/ 8d COMMON (0.131" DIA. x 2½") @ 6" O.C., FIELD @ 12" O.C. (REFER TO 9/S4.1)
5. "W#" REFERS TO SHEARWALL TYPE PER 3/S4.1 & 7/S4.1. ALL OTHER NON-DESIGNATED EXTERIOR WALLS SHALL BE SHEARWALL TYPE W6. WHERE INDICATED, "(x-x)" REFERS TO MINIMUM SHEARWALL LENGTH. COORDINATE ACTUAL LENGTH WITH ARCHITECTURAL.
6. "MSTC66/CMST" & "CS16" REFER TO HOLDOWNS PER 3/S4.2 & 4/S4.2 RESPECTIVELY.
7. PROVIDE TOP PLATE SPLICES PER 5/S4.1
8. REFER TO 11/S4.1 AT SHEARWALL INTERSECTIONS.
9. ALL NEW HEADERS NOT NOTED OTHERWISE ON PLAN SHALL BE (2) 2x10. (REFER TO 6/S4.1)
10. AT NEW EXTERIOR WALLS, PROVIDE CONTINUOUS 1 ¾" x 11 ⅞" LSL STRUCTURAL RIM JOIST, UNLESS NOTED OTHERWISE. RIM JOISTS OVER OPENINGS SHALL BE CONTINUOUS w/ NO SPLICES. REFER TO 8/S4.2 & 12/S4.2.
11. 4" CONCRETE SLAB ON GRADE REINFORCED WITH #3 @ 12" OC EACH WAY, CENTERED IN SLAB. PROVIDE A BASE OF 4" COMPACTED, CLEAN ¾" MINUS GRAVEL COVERED WITH 6 MIL. VAPOR BARRIER. PROVIDE JOINTS PER 7/S3.1.
12. CONTRACTOR TO VERIFY THAT ALL POSTS HAVE CONTINUOUS BEARING THROUGH TO THE FOUNDATION.
13. REFER TO DETAIL 1/S3.1 FOR ALL GUARDRAIL REQUIREMENTS.

LEGEND

- STRUCTURAL WOOD WALL or POST BELOW THIS LEVEL
- STRUCTURAL WOOD WALL or POST ABOVE THIS LEVEL
- (E) STRUCTURAL WOOD WALL OR POST BELOW THIS LEVEL
- (E) SPAN DIRECTION
- SPAN DIRECTION
- EXTENT OF SPAN
- (N) CONCRETE WALL ABOVE THIS LEVEL
- (E) CONCRETE WALL ABOVE THIS LEVEL
- JOIST or BEAM
- (E) JOIST OR BEAM
- HD — HOLDOWN
- STRAP PER PLAN
- BLOCK DIAPH. 2X'S LAID FLAT @ ALL PANEL EDGES. 8D @ 4"OC @ ALL PANEL EDGES & 12"OC IN FIELD. (REFER TO 9/S4.1)

buker ENGINEERING LLC
4303 Stone Way N
Seattle, WA 98103
206.258.6333

DANIEL R. BUKER
STATE OF WASHINGTON
44090
STRUCTURAL ENGINEER
PROFESSIONAL ENGINEER

Alpay Residence

5419 96th Ave SE
Mercer Island, WA 98040

No.	Date	Issue
	11/10/25	Permit

Sheet Contents

MAIN FLOOR FRAMING PLAN

Sheet No.

S2.1

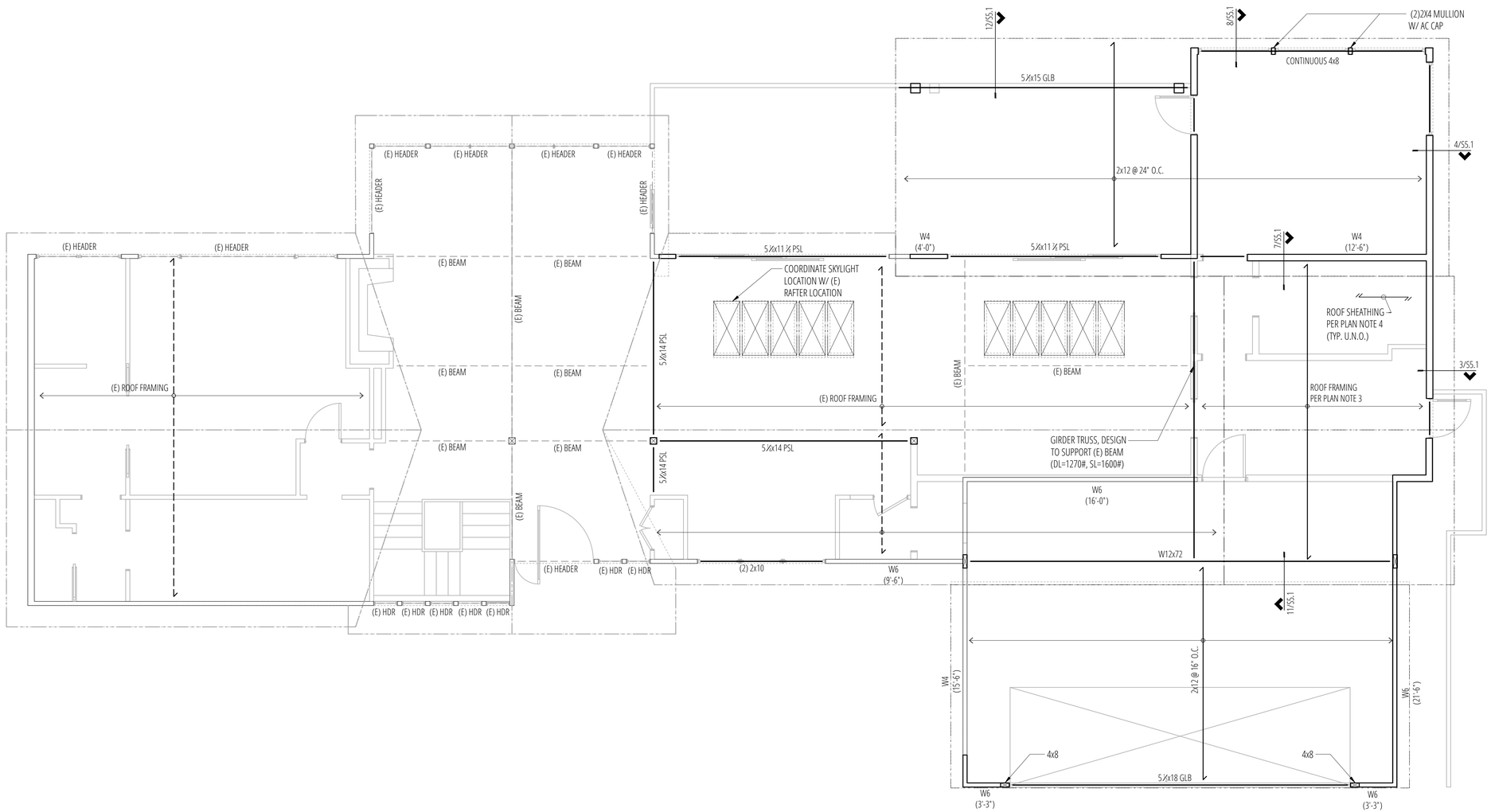

Roof Framing Plan

SCALE: ¼"=1'-0"

PLAN NOTES

1. REFER TO GENERAL STRUCTURAL NOTES FOR ADDITIONAL REQUIREMENTS (S1.1)
2. REFER TO ARCHITECTURAL DRAWINGS FOR ALL DIMENSIONS UNLESS SPECIFICALLY NOTED ON STRUCTURAL PLANS.
3. NEW ROOF FRAMING SHALL BE PRE-MANUFACTURED ROOF TRUSSES @ 24" O.C. (TRUSS DESIGN BY OTHERS).
4. NEW ROOF SHEATHING SHALL BE ½" CDX PLYWOOD SHEATHING WITH 40/20 SPAN RATING. NAIL FRAMED PANEL EDGES w/ 8d COMMON (0.131" DIA. x 2½") @ 6" O.C., FIELD @ 12" O.C. (REFER TO 9/S4.1)
5. "W#" REFERS TO SHEARWALL TYPE PER 3/S4.1 & 7/S4.1. ALL OTHER NON-DESIGNATED EXTERIOR WALLS SHALL BE SHEARWALL TYPE W6. WHERE INDICATED, "(x-x)" REFERS TO MINIMUM SHEARWALL LENGTH. COORDINATE ACTUAL LENGTH WITH ARCHITECTURAL.
6. ALL HEADERS AT NEW ROOF NOT NOTED OTHERWISE ON PLAN SHALL BE (2) 2x8. (REFER TO DETAIL 6/S4.1)
7. PROVIDE TOP PLATE SPLICES PER 5/S4.1
8. WHERE OVERFRAMING IS INDICATED, OVERFRAME WITH 2x6 @ 24" O.C. w/ 4'-0" MAX SPAN. (REFER TO DETAIL 2/S5.1 FOR CONNECTION OF OVERFRAMING TO PRIMARY ROOF)
9. REFER TO 11/S4.1 AT SHEARWALL INTERSECTIONS.

LEGEND

- STRUCTURAL WOOD WALL or POST BELOW THIS LEVEL
- STRUCTURAL WOOD WALL or POST ABOVE THIS LEVEL
- (E) STRUCTURAL WOOD WALL OR POST BELOW THIS LEVEL
- (E) SPAN DIRECTION
- SPAN DIRECTION
- EXTENT OF SPAN
- (E) ROOFLINE
- ROOFLINE
- JOIST or BEAM
- (E) JOIST OR BEAM
- HD — HOLDOWN
- STRAP PER PLAN
- G.T. — GIRDER TRUSS
- H.T. — HIP TRUSS
- OVERFRAMING
- BLOCK DIAPH. 2X'S LAID FLAT @ ALL PANEL EDGES. 8D @ 4"OC @ ALL PANEL EDGES & 12"OC IN FIELD. (REFER TO 9/S4.1)

4303 Stone Way N
Seattle, WA 98103
206.258.6333

DANIEL R. BUKER
STATE OF WASHINGTON
44090
STRUCTURAL ENGINEER
PROFESSIONAL ENGINEER

Alpay Residence

5419 96th Ave SE
Mercer Island, WA 98040

No.	Date	Issue
	11/10/25	Permit

Sheet Contents

ROOF FRAMING PLAN

Sheet No.

S2.2

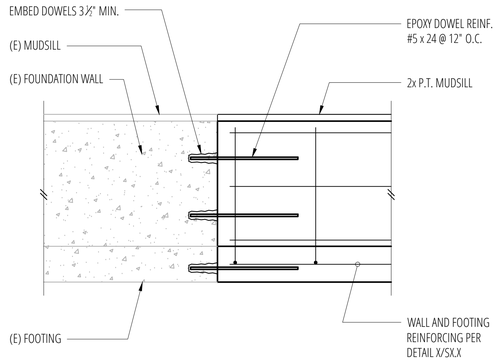

3 Epoxy Dowel Connection at (E) Foundation
SCALE: 3/4"=1'-0"

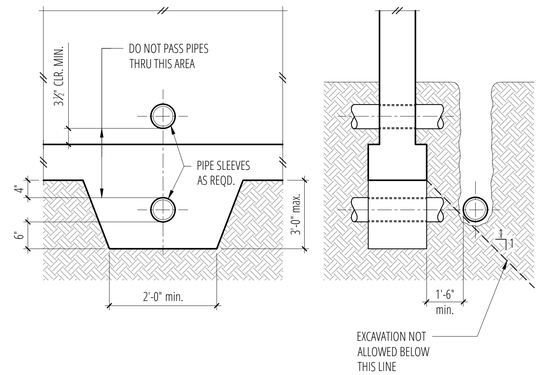

4 Pipe and Trench Locations
SCALE: 3/4"=1'-0"

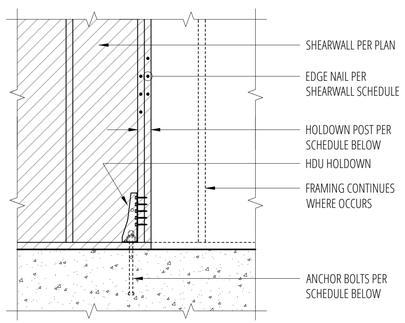

1
SCALE: 3/4"=1'-0"

2
SCALE: 3/4"=1'-0"

REINFORCING SPLICE AND DEVELOPMENT LENGTH SCHEDULE

FOR F'c = 2500 psi, GRADE 60 REINFORCING

I MINIMUM STRAIGHT DEVELOPMENT LENGTH (ℓd)

BAR SIZE	TOP BARS	OTHER BARS
#3	23"	18"
#4	31"	24"
#5	40"	30"
#6	47"	36"
#7	68"	53"
#8	78"	60"
#9	88"	68"
#10	99"	77"
#11	110"	85"

II MINIMUM LAP SPLICE LENGTHS (ℓs)

BAR SIZE	TOP BARS	OTHER BARS
#3	31"	23"
#4	41"	31"
#5	51"	40"
#6	62"	47"
#7	89"	68"
#8	102"	78"
#9	114"	88"
#10	130"	99"
#11	143"	110"

TOP BARS ARE HORIZONTAL BARS WITH MORE THAN 12" DEPTH OF CONCRETE CAST BELOW THEM.

IF CLEAR CONCRETE COVER IS NOT GREATER THAN THE DIAMETER OF THE BAR, OR THE CENTER TO CENTER SPACING IS NOT GREATER THAN 3 BAR DIAMTERS, THEN LENGTHS SHALL BE INCREASED BY 50%

III MINIMUM EMBEDMENT LENGTHS (ℓdh) FOR STANDARD END HOOKS

BAR SIZE	LENGTH
#3	7"
#4	9"
#5	11"
#6	13"
#7	14"
#8	17"
#9	19"
#10	21"
#11	24"

1. SIDE COVER MUST BE EQUAL TO OR GREATER THAN 2½"
2. END COVER FOR 90° HOOKS MUST BE EQUAL TO OR GREATER THAN 2"

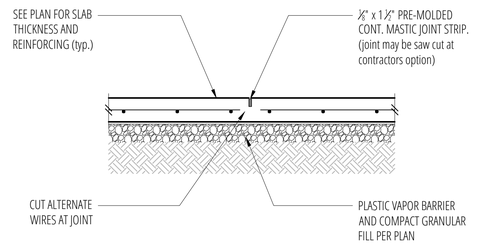

CONTROL JOINT

PROVIDE CONTROL OR CONSTRUCTION JOINTS IN SLABS ON GRADE TO BREAK UP SLAB INTO RECTANGULAR AREAS OF 400 SQUARE FEET OR LESS. AREAS TO BE APPROX. SQUARE AND HAVE NO ACUTE ANGLES. JOINT LOCATIONS TO BE APPROVED BY THE ARCHITECT.

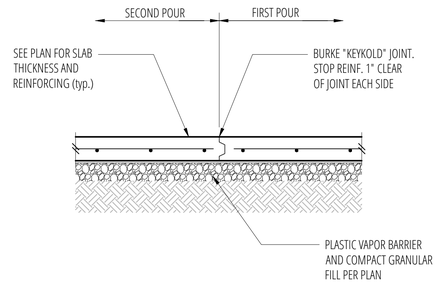

CONSTRUCTION JOINT

7 Typical Slab Joints
SCALE: 3/4"=1'-0"

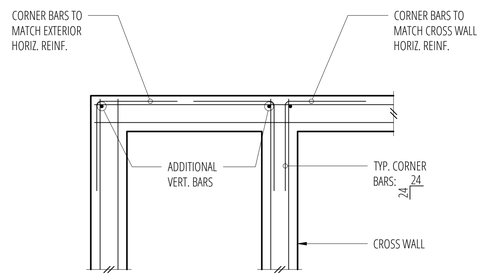

DOUBLE CURTAIN

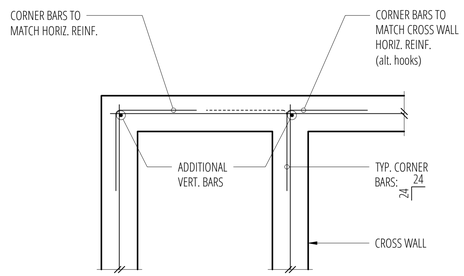

SINGLE CURTAIN

Holdown Schedule

Plan Mark	Screws	Anchor Bolt ②	A.B. Embed	Holdown Post ① IF 2x4	Holdown Post ① IF 2x6	Capacity #
HDU2-SDS2.5	(6) SDS¼" x 2½"	SSTB16	12⅝"	(2) 2x4	4x6	2215/3075
HDU4-SDS2.5	(10) SDS¼" x 2½"	SB ⅝ x 24	18"	4x4	4x6	4565
HDU5-SDS2.5	(14) SDS¼" x 2½"	SB ⅝ x 24	18"	4x4	4x6	5645
HDU8-SDS2.5	(20) SDS¼" x 2½"	SB ⅝ x 24	18"	4x4	4x6	6970
HDU11-SDS2.5	(30) SDS¼" x 2½"	SB 1 x 30	24"	4x8	6x6	9535 (8315 AT CORNER)
HDU14-SDS2.5	(36) SDS¼" x 2½"	SB 1 x 30	24"	N/A	6x6	11470 (8315 AT CORNER)

① MINIMUM SIZE OF POST AT END OF WALL UNLESS NOTED OTHERWISE ON FRAMING PLANS.

② "SSTB" & "SB" REFER TO ANCHOR BOLTS BY SIMPSON STRONG-TIE. INSTALL PER MANUFACTURER.

③ AT (E) FOUNDATION, PROVIDE EPOXY GROUTTED THREADED ROD (DIA. PER MAUNFACTURER) EMBED 12"

9 HDU Holdown Schedule
SCALE: 3/4"=1'-0"

10 Lap Splice and Development Schedule
SCALE: 3/4"=1'-0"

11 Typical Corner Bars at Concrete Walls and Footings
SCALE: 3/4"=1'-0"

buker ENGINEERING LLC
4303 Stone Way N
Seattle, WA 98103
206.258.6333

DANIEL R. BUKER
STATE OF WASHINGTON
44090
STRUCTURAL ENGINEER
PROFESSIONAL ENGINEER

Alpay Residence
5419 96th Ave SE
Mercer Island, WA 98040

No.	Date	Issue
	11/10/25	Permit

Sheet Contents
CONCRETE DETAILS

Sheet No.
S3.1

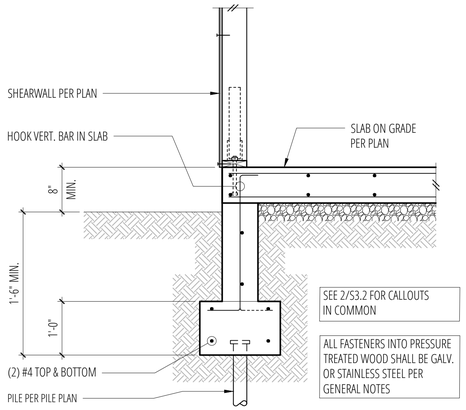

1 Exterior Wall w/ Slab on Grade
SCALE: 3/4"=1'-0"

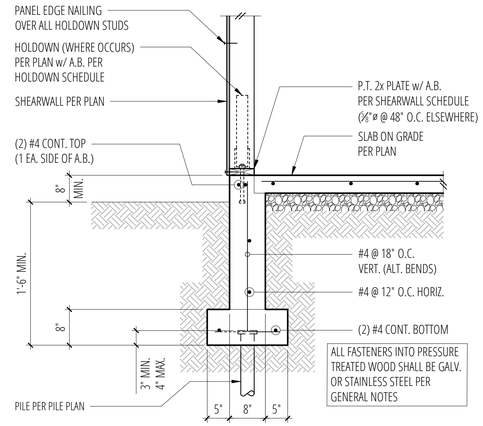

2 Exterior Wall w/ Slab on Grade
SCALE: 3/4"=1'-0"

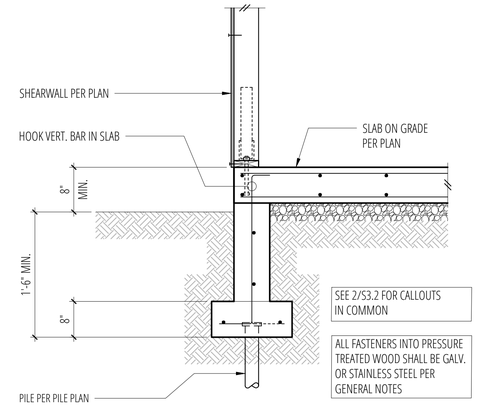

3 Exterior Wall w/ Slab on Grade
SCALE: 3/4"=1'-0"

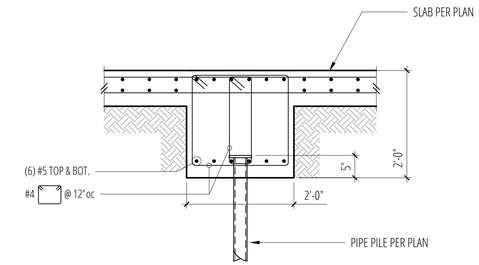

4 Slab Grade Beam
SCALE: 3/4"=1'-0"

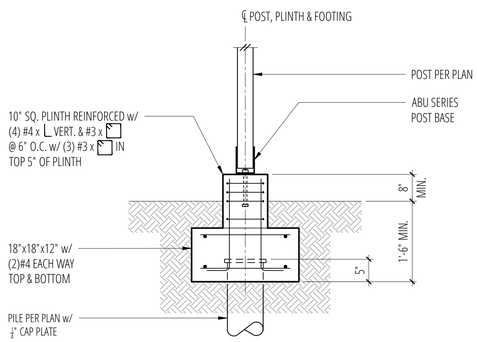

5 Deck or Canopy Post Footing
SCALE: 3/4"=1'-0"

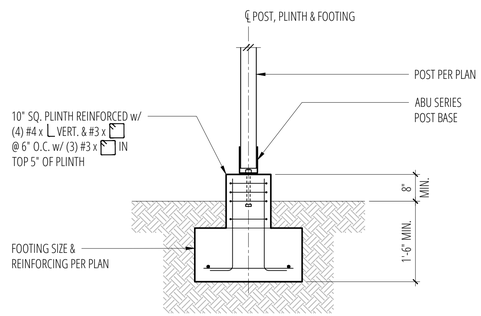

6 Deck or Canopy Post Footing
SCALE: 3/4"=1'-0"

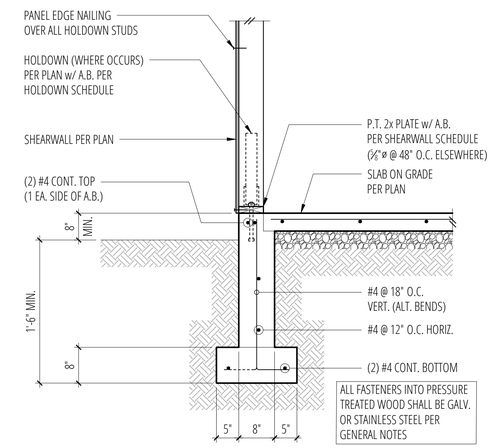

7 Exterior Wall w/ Slab on Grade
SCALE: 3/4"=1'-0"

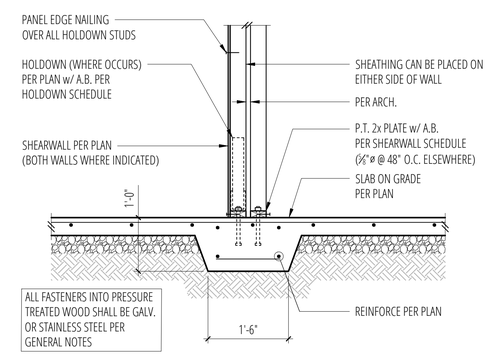

8 Interior Party Wall w/ Thickened Slab
SCALE: 3/4"=1'-0"

9
SCALE: 3/4"=1'-0"

10
SCALE: 3/4"=1'-0"

11
SCALE: 3/4"=1'-0"

12
SCALE: 3/4"=1'-0"

buker ENGINEERING LLC
4303 Stone Way N
Seattle, WA 98103
206.258.6333

DANIEL R. BUKER
STATE OF WASHINGTON
44090
STRUCTURAL ENGINEER
PROFESSIONAL ENGINEER

Alpay Residence

5419 96th Ave SE
Mercer Island, WA 98040

No.	Date	Issue
	11/10/25	Permit

Sheet Contents
CONCRETE DETAILS

Sheet No.
S3.2

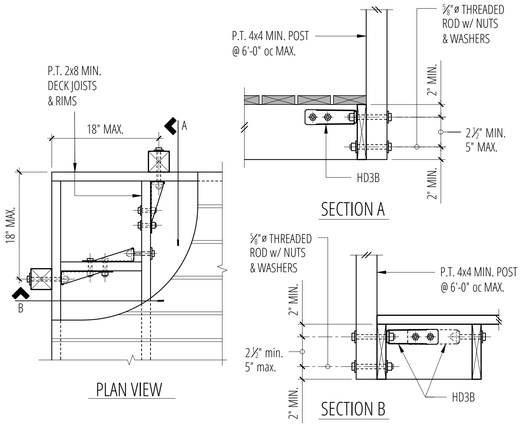

1 Typical Guardrail Construction
SCALE: 3/4"=1'-0"

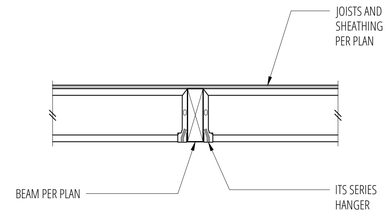

2 Typical Flush Beam / Header
SCALE: 3/4"=1'-0"

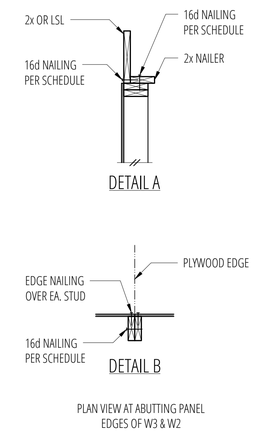

SHEARWALL SCHEDULE ①②③⑤⑥⑦

MARK	SHEATHING	PANEL EDGE NAILING	TOP PLATE CONNECTION		BASE PLATE CONNECTION	
			IF TJI	IF 2x OR LSL ⑧ ⑨	AT WOOD	AT CONCRETE
W6	15/32" CDX PLYWOOD	8d @ 6"OC	16d @ 6" OC	A35 @ 24" OC	16d @ 6" OC	⅝" ø A.B. @ 48" OC
W4	15/32" CDX PLYWOOD	8d @ 4" OC	16d @ 4" OC	A35 @ 16" OC	16d @ 4" OC	⅝" ø A.B. @ 32" OC
W3 ④	15/32" CDX PLYWOOD	8d @ 3"OC	(2) ROWS 16d @ 6" OC	A35 @ 12" OC	16d @ 3" OC ⑩	⅝" ø A.B. @ 16" OC
W2 ④	15/32" CDX PLYWOOD	8d @ 2"OC	(2) ROWS 16d @ 4½" OC	A35 @ 9" OC	(2) ROWS 16d @ 4½" OC ⑪	⅝" ø A.B. @ 12" OC

1. BLOCK PANEL EDGES WITH 2x MIN. LAID FLAT AND NAIL PANELS TO INTERMEDIATE SUPPORTS WITH 8d @ 12' o.c.
2. 8d NAILS SHALL BE 0.131" x 2½" (common) - 16d NAILS SHALL BE 0.135"ø x 3½" (box)
3. EMBED ANCHOR BOLTS AT LEAST 7" EXPANSION BOLTS MAY BE SUBSTITUTED FOR ANCHOR BOLTS WITH 4" EMBEDMENT. ALL BOLTS SHALL HAVE 3" x 3" x¼" PLATE WASHERS. EXTEND TO WITHIN ½" OF THE PLYWOOD SHEATHING.
4. 3x STUDS OR DOUBLE STUDS NAILED TOGETHER W/ BASE PLATE NAILING ARE REQUIRED AT ABUTTING PANEL EDGES OF W3 AND W2. SEE DETAIL B. WHERE 3x STUDS ARE USED FOR W2, STAGGER NAILS AT ADJOINING PANEL EDGES.
5. TWO STUDS MINIMUM ARE REQUIRED AT EACH END OF ALL SHEARWALLS AND ALL END STUDS SHALL RECEIVE PANEL EDGE NAILING.
6. ALL EXTERIOR WALLS SHALL BE W6, UNLESS NOTED OTHERWISE.
7. ⅞" O.S.B. MAY BE SUBSITUTED FOR 15/32" CDX.
8. LTP4's MAY BE SUBSTITUTED FOR A35's AT CONTRACTORS OPTION.
9. A 2x NAILER ATTACHED W/ BASE PLATE NAILING PER DETAIL A MAY BE SUBSTITUTED FOR A35's AT CONTRACTORS OPTION.
10. STAGGER NAILS IN ROW W/ ½" MIN. OFFSET.
11. MINIMUM OFFSET BETWEEN ROWS ½, AND MINIMUM RIM OR JOIST 3½" WIDE.

3 Shearwall Schedule
SCALE: 3/4"=1'-0"

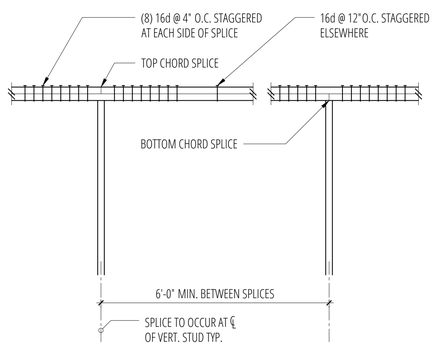

5 Typical Top Plate Splice
SCALE: 3/4"=1'-0"

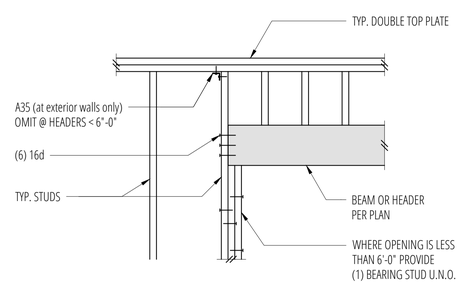

6 Typical Header Support
SCALE: 3/4"=1'-0"

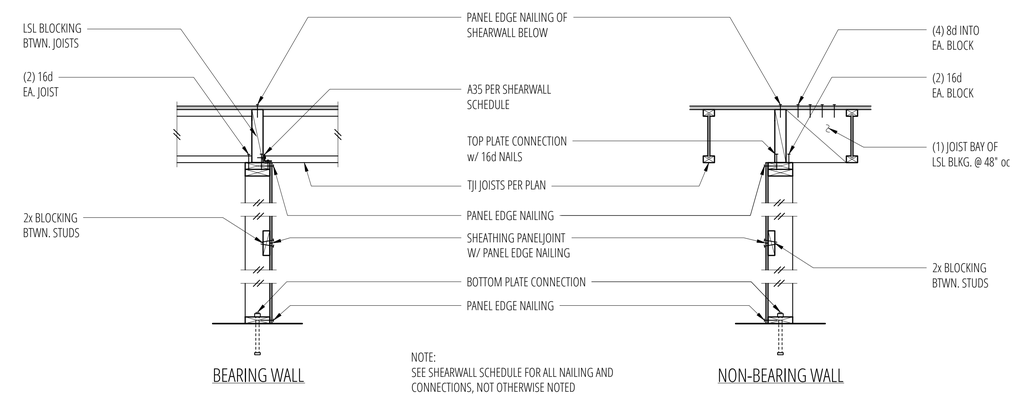

7 Typical Shearwall Construction
SCALE: 3/4"=1'-0"

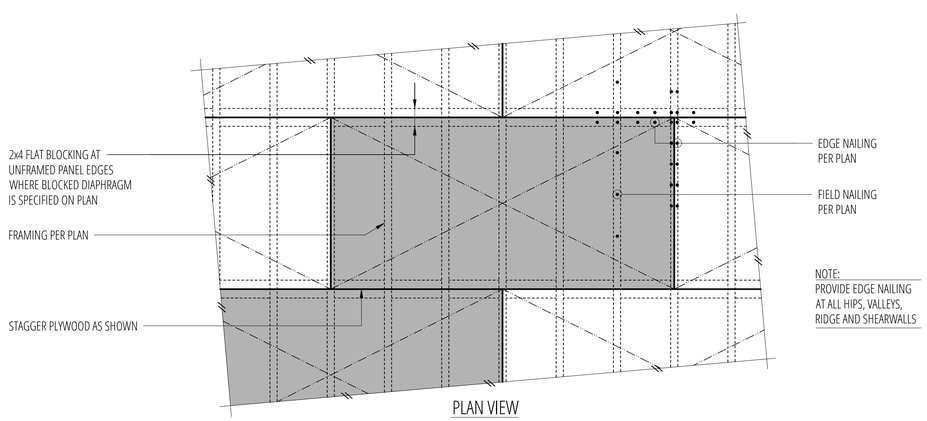

9 Typical Diaphragm Sheathing and Nailing
SCALE: 3/4"=1'-0"

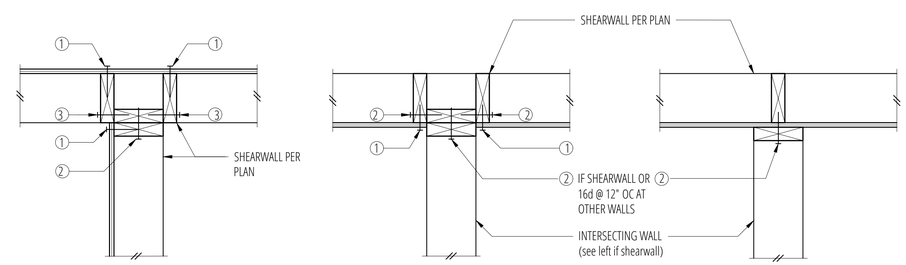

① PLYWOOD PANEL EDGE NAILING PER SHEARWALL SCHEDULE

② BASE PLATE NAILING PER SHEARWALL SCHEDULE

③ 16d @ 8" OC

11 Typical Shearwall Intersection
SCALE: 3/4"=1'-0"

buker ENGINEERING LLC
4303 Stone Way N
Seattle, WA 98103
206.258.6333

DANIEL R. BUKER
STATE OF WASHINGTON
44090
STRUCTURAL ENGINEER
PROFESSIONAL ENGINEER

Alpay Residence
5419 96th Ave SE
Mercer Island, WA 98040

No.	Date	Issue
	11/10/25	Permit

Sheet Contents
FLOOR FRAMING DETAILS

Sheet No.
S4.1

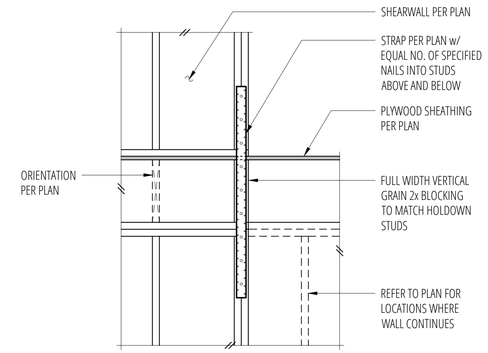

1
SCALE: 3/4"=1'-0"

2
SCALE: 3/4"=1'-0"

3 Typical MST/MSTC Holdown at Floor
SCALE: 3/4"=1'-0"

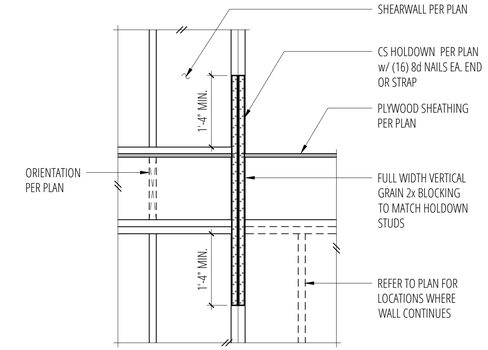

4 Typical CS Holdown at Floor
SCALE: 3/4"=1'-0"

5
SCALE: 3/4"=1'-0"

6
SCALE: 3/4"=1'-0"

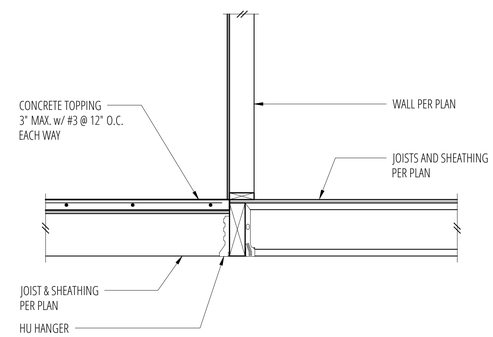

7 Floor Framing w/ Concrete Topping at Beam Connection
SCALE: 3/4"=1'-0"

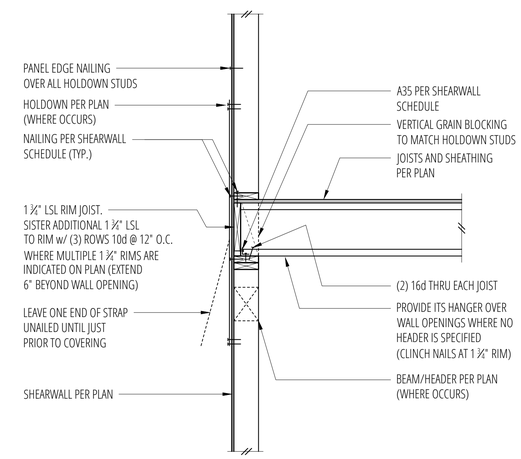

8 Perpendicular Floor Framing (Continuous Rim)
SCALE: 3/4"=1'-0"

9
SCALE: 3/4"=1'-0"

10
SCALE: 3/4"=1'-0"

11
SCALE: 3/4"=1'-0"

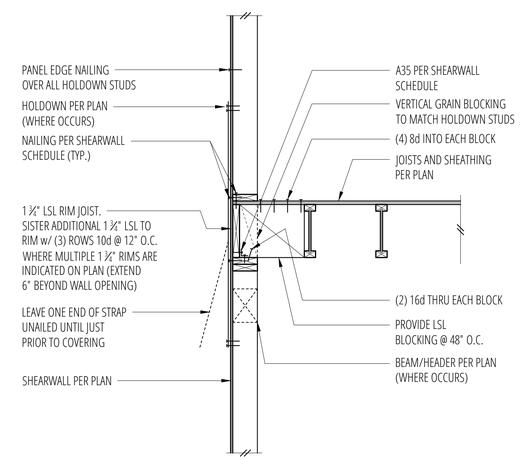

12 Parallel Floor Framing (Continuous Rim)
SCALE: 3/4"=1'-0"

buker ENGINEERING LLC
4303 Stone Way N
Seattle, WA 98103
206.258.6333

DANIEL R. BUKER
STATE OF WASHINGTON
44090
STRUCTURAL ENGINEER
PROFESSIONAL ENGINEER

Alpay Residence

5419 96th Ave SE
Mercer Island, WA 98040

No.	Date	Issue
	11/10/25	Permit

Sheet Contents
FLOOR FRAMING DETAILS

Sheet No.
S4.2

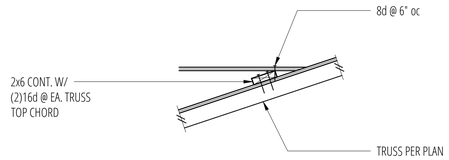

1
SCALE: 3/4"=1'-0"

2 Overframing Connection
SCALE: 3/4"=1'-0"

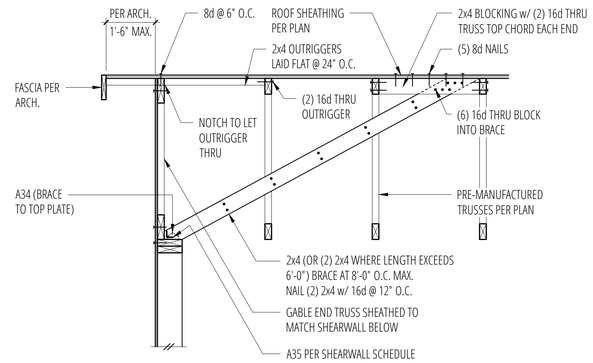

3 Exterior Non-Bearing Wall at Roof (w/ Brace)
SCALE: 3/4"=1'-0"

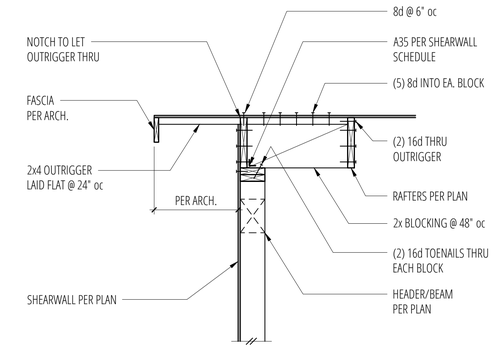

4 Exterior Non-Bearing Wall at Roof
SCALE: 3/4"=1'-0"

5
SCALE: 3/4"=1'-0"

6
SCALE: 3/4"=1'-0"

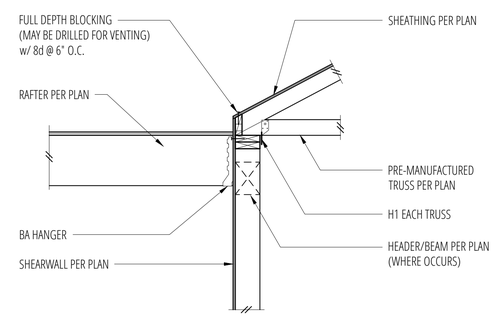

7 Exterior Bearing Wall at Roof
SCALE: 3/4"=1'-0"

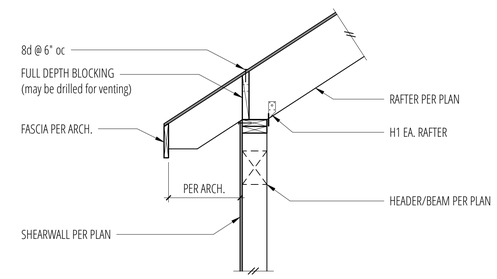

8 Exterior Bearing Wall At Roof
SCALE: 3/4"=1'-0"

9
SCALE: 3/4"=1'-0"

10
SCALE: 3/4"=1'-0"

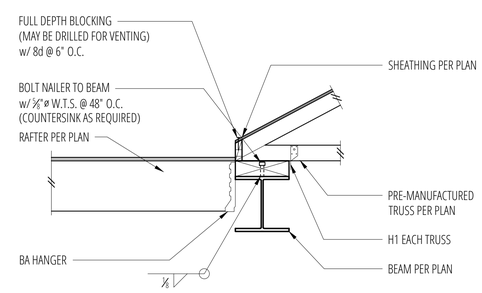

11 Beam & Post at Roof
SCALE: 3/4"=1'-0"

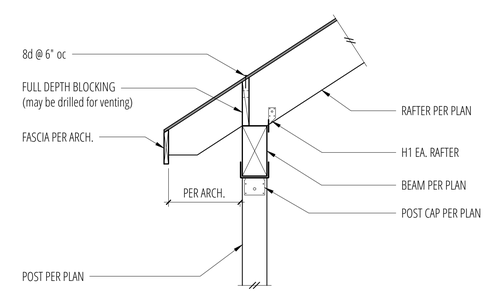

12 Beam & Post At Roof
SCALE: 3/4"=1'-0"

buker ENGINEERING LLC
4303 Stone Way N
Seattle, WA 98103
206.258.6333

DANIEL R. BUKER
STATE OF WASHINGTON
44090
STRUCTURAL ENGINEER
PROFESSIONAL ENGINEER

Alpay Residence

5419 96th Ave SE
Mercer Island, WA 98040

No.	Date	Issue
	11/10/25	Permit

Sheet Contents
ROOF FRAMING DETAILS

Sheet No.
S5.1